Gmail

Jerrick Hernandez <jhernandez@guamopa.com>

Procurement Appeal Docket No. OPA-PA-22-002 University of Guam's Agency Report

Cynthia Guerrero <cguerrero@triton.uog.edu> Tue, Feb 22, 2022 at 7:31 PM
To: Jerrick Hernandez <jhernandez@guamopa.com>
Cc: "forman@guamlawoffice.com" <forman@guamlawoffice.com>, "Camacho, Anthony" <arcamacho@triton.uog.edu>

Hafa Adai:

Provided below is a link to access the electronic copy of the University of Guam's Agency Report in reference to OPA Procurement Appeal Docket No. OPA-PA-22-002. An original shall be delivered to the OPA in Hagatna. Kindly acknowledge receipt.

https://acrobat.adobe.com/link/review?uri=urn:aaid:scds:US:c9a68f66-3588-417c-92b0-fd1dcd03175a

Adobe Acrobat

Adobe Acrobat

acrobat.adobe.com

--
Si Yu'os ma'åse',

Cynthia T. Guerrero, MPA

Office of the Legal Counsel
Office: +1 (671) 735-2992
cguerrero@triton.uog.edu
https://www.uog.edu/administration/office-of-the-president/legal-counsel

The University of Guam is an equal opportunity provider and employer.

ANTHONY R. CAMACHO, ESQ.
UNIVERSITY OF GUAM
UOG Station
Mangilao, Guam 96923

Appearing as Counsel for University of Guam

PROCUREMENT APPEAL

IN THE MATTER OF	)	DOCKET NO. OPA-PA-22-002
	)	
ALL BUSINESS ENTERPRISES CORP.,	)	**UNIVERSITY OF GUAM'S AGENCY REPORT**
	)	
Appellant.	)	
	)	

COMES NOW, Purchasing Agency UNIVERSITY OF GUAM (the "University"), through its General Counsel, ANTHONY R. CAMACHO, ESQ., who, in accordance with 2 G.A.R., Div. 4, §12105 and the OPA's February 8, 2022 Notice of Receipt of Appeal in this matter, submits its Agency Report.

SUBMITTED THIS 22 day of February, 2022 by:

Anthony R. Camacho

ANTHONY R. CAMACHO, ESQ.
Attorney for the University of Guam

UNIVERSITY OF GUAM
AGENCY REPORT

INVITATION FOR BID NO. B21-17
PURCHASING OF HVAC EQUIPMENT

UNIVERSITY OF GUAM

AGENCY REPORT

INVITATION FOR BID NO. B21-17

PURCHASING OF HVAC EQUIPMENT

Table of Contents **Tab No.**

TAB 1

ALL BUSINESS ENTERPRISES. CORP.

P.O. BOX 8410 TAMUNING, GUAM U.S.A. 96931
TELEPHONE: (671) 646-3346; FAX (671) 646-0589

December 17, 2021

VIA HAND DELIVERY

Thomas W. Krise
President, University of Guam
301 University of Guam
UOG Station
Mangilao, Guam 96913

VIA HAND DELIVERY

Anthony R. Camacho, Esq.
General Counsel, University of Guam
C/o Office of the President
301 University Drive
UOG Station
Mangilao, Guam 96913

VIA HAND DELIVERY

Emily G. Gumataotao
Supply Management Administrator
University of Guam
UOG Station
Mangilao, Guam 96913

Office of the Legal Counsel
University of Guam
Received By:
12/20/21 11:20am
Date & Time

Re: UOG IFB B21-17
Purchasing of HVAC Equipment
All Business Enterprises Corporation Protest

Dear President Krise, Attorney Camacho, and Administrator Gumataotao:

Please be advised that All Business Enterprises Corporation ("ABEC") protests the University of Guam's rejection of ABEC's bid and the award to Tony's Workshop for UOG IFB B21-17: Purchasing of HVAC Equipment. A copy of the notice of rejection of ABEC's bid dated December 7, 2021 is attached hereto as "Exhibit A". A. copy of notice of award to Tony's Workshop dated December 7, 2021 is attached hereto as "Exhibit B". ABEC does not the number of the contract.

The basis for this protest is that the bids submitted by the two bidders who finished ahead to ABEC, Tony's Workshop and JWS Refrigeration and Air Condition LTD ("JWS") were nonresponsive. ABEC had made a Sunshine Act request for the Tony's Workshop and JWS bid submittals including the ACCU Unit Brochures on December 6, 2021, and followed up on December 7, 2021 and December 9, 2021. See attached "Exhibit C", which includes all three e-mails about the Sunshine Act request. The University did not responds until December 13, 2021. The response is attached as "Exhibit D". ABEC was unable to view the requested documents and learn of the basis for this protest until December 14, 2021.

ALL BUSINESS ENTERPRISES. CORP.

P.O. BOX 8410 TAMUNING, GUAM U.S.A. 96931
TELEPHONE: (671) 646-3346; FAX (671) 646-0589

One major requirement of UOG IFB B21-17 was Factory Phenolic Coating. The description for six of the units included in the Tony's Workshop bid did not include Factory Phenolic Coating. Please see attached documents which show no indication of Factory Phenolic Coating, thus confirm that the bid from Tony's Workshop was nonresponsive:

1. Unit Report for RFK Building First Building First Floor Main Entrance 112321; Ref: page 29 of 178 (enclosed as "Exhibit E")

2. Unit Report for 7.5 RFK Building First Floor AV Room 112321; Ref: Page 43 of 178 (enclosed as "Exhibit F")

3. Unit Report for 7.5 RFK Building First Floor Office 112321; Ref: page 56 of 178 (enclosed as "Exhibit G")

4. Unit Report for PIP (GLE) Second Floor 112321; Ref: page 69 of 178 (enclosed as "Exhibit H")

5. Unit Report for 20 Science Building Third Floor 112321; Ref: page 106 of 178 (enclosed as "Exhibit I")

6. Unit Report for Lecture Hall Auditorium 112321; Ref: page 143 of 178 (enclosed as "Exhibits J")

If the bid from Tony's Workshop is rejected as being nonresponsive, that does not mean that JWS should be awarded the contract. The bid from JWS was even more nonresponsive. In addition to requiring Factory Phenolic Coating, the bid requirements also stated that the procurement is subject to the Buy American Act.

The Technical report in the submission from JWS has no indication of Factory Phenolic Coating for any of the units. See enclosed "Exhibit K".

In addition, the Certified Drawing submittal from JWS shows that the units are to be manufactured by "DB-Dunham-Bush Industries SDN BHD". Dubham-Bush is a Malaysian company, not an American company. Enclosed as Exhibits L and M please find copies of on-line information from Bloomberg and Dunn & Bradstreet confirming that Dunham-Bush is a Malaysian Company.

ALL BUSINESS ENTERPRISES. CORP.

P.O. BOX 8410 TAMUNING, GUAM U.S.A. 96931
TELEPHONE: (671) 646-3346; FAX (671) 646-0589

In conclusion, both the Tony's Workshop and the JWS bid are nonresponsive. Therefore UOG IFB B21-17: Purchasing of HVAC Equipment should be awarded to the sole responsive bidder, All Business Enterprise Corporation.

Thank you for your attention to this matter. Please let me know if you require any additional information from ABEC to evaluate this protest.

Sincerely,

ALL BUSINESS ENTERPRISES CORP.

Nelia F. Bangayan - President

UNIVERSITY OF GUAM
UNIBETSEDÅT GUÅHAN

ADMINISTRATION & FINANCE
Consolidated Procurement Office

BID STATUS

December 7, 2021

ALL BUSINESS ENTERPRISES CORPORATION
Nelia F. Bangayan, President
Ph: 671-646-4435
Email: nbangayan@jbmoderntech.com

Subject: **UOG Invitation for Bid No. B21-17, "Purchasing of HVAC Equipment"**

Bid Open: December 6, 2021

/ / Cancelled (in its entirety), or partially cancelled due to:
- ( ) Insufficient funds;
- ( ) Change of specifications; or
- ( ) Insufficient number of bidders

/X/ Rejected due to:
- ( ) Late submission of bid:
- ( ) No bid security or insufficient bid security amount submitted; as required by General Terms and Conditions;
- ( ) Not meeting the delivery requirement as stated in the IFB
- ( ) Non-conformance with the specifications
- ( ) Inability to provide future maintenance and services to the equipment;
- (X) High price; or
- ( ) Other:

/X/ Bid is recommended for award to: ***TONY's WORKSHOP***

Emily G. Gumataotao
Supply Management Administrator

Please Acknowledge Receipt and return to uog.bids@triton.uog.edu ..

VENDOR (Print name & signature) Date

T: +1 671.735.2925 F: +1 671.735.3010 W: www.uog.edu E: uog.bids@triton.uog.edu
Mailing Address: 303 University Drive UOG Station Mangilao, Guam 96913

UNIVERSITY OF GUAM
UNIBETSEDÅT GUÅHAN

ADMINISTRATION & FINANCE
Consolidated Procurement Office

BID STATUS

December 7, 2021

JWS Refrigeration & Air Conditioning LTD
Roberto Perez
CFO / General Manager
Ph: 671-588-5979, Email: robertp@jwsguam.com

Subject: **UOG Invitation for Bid No. B21-17, PURCHASING OF HVAC EQUIPMENT**
Bid Open: December 6, 2021

/ / Cancelled (in its entirety), or partially cancelled due to:
- ( ) Insufficient funds;
- ( ) Change of specifications; or
- ( ) Insufficient number of bidders

/X/ Rejected due to:
- ( ) Late submission of bid:
- ( ) No bid security or insufficient bid security amount submitted; as required by General Terms and Conditions;
- ( ) Not meeting the delivery requirement as stated in the IFB
- ( ) Non-conformance with the specifications
- ( ) Inability to provide future maintenance and services to the equipment;
- (X) High price; or
- ( ) Other:

/X/ Bid is recommended for award to: **Tony's Workshop**

Emily G. Gumataotao
Supply Management Administrator

Please Acknowledge Receipt and email back to uog.bids@triton.uog.edu .

VENDOR (Print name & signature) Date

T: +1 671.735.2925 F: +1 671.735.3010 W: www.uog.edu E: uog.bids@triton.uog.edu
Mailing Address: 303 University Drive UOG Station Mangilao, Guam 96913

UNIVERSITY OF GUAM
UNIBETSEDÅT GUÅHAN

ADMINISTRATION & FINANCE
Consolidated Procurement Office

December 7, 2021

TONY's WORKSHOP
P.O. Box 23066 GMF
Barrigada, Guam 96921
Main: 671-637-3060
Email: mike@tonysworkshop.com / tonyworkshop@teleguam.net

RE: **NOTICE OF AWARD- UOG IFB B21-17: "PURCHASING OF HVAC EQUIPMENT"**

Dear Sir/Madam:

This letter is to certify that **TONY's WORKSHOP** is being awarded the University of Guam IFB **BID B21-17.**

As a result of our evaluation on the above referenced IFB, a purchase order or contract will be forthcoming.

A representative from the respective unit will be in contact with you upon issuance of the purchase order and/or contract.

If you have any questions, please feel free to contact me at 735-2925 or email at uog.bids@triton.uog.edu.

Thank you and Congratulations!

Sincerely,

Emily G. Gumataotao
Supply Management Administrator

Please acknowledge receipt and return via email to uog.bids@triton.uog.edu.

_____
(Please print name and sign) (DATE)

cc: FMS
PROCUREMENT FILES

UNIVERSITY OF GUAM
UNIBETSEDÅT GUÅHAN

ADMINISTRATION & FINANCE
Consolidated Procurement Office

December 6, 2021

Michael SJ. Ecalnea
P.O. Box 23066 GMF
Barrigada, Guam 96921
Main: 671-637-3060
Email: mike@tonysworkshop.com / tonyworkshop@teleguam.net

RE: **NOTICE OF INTENT TO AWARD- B21-17: PURCHASING OF HVAC EQUIPMENT**

Dear Sir/Madam:

As a result of our analysis on the above-referenced IFB, your bid submission for **PURCHASING OF HVAC EQUIPMENT**, is being considered for possible award, pending submission of requirements below:

1) *Copy of Guam Business License*
2) *Data Brochure of equipment being offered*

Please submit the above to the procurement office via email NLT Tuesday, December 7, 2021 by noon. Please be advised that this notice should not be construed as an award.

You can contact me at 735-2925 or email: uog.bids@triton.uog.edu if you have any questions regarding this notice.

Sincerely,

Emily G. Gumataotao
Supply Management Administrator

Please acknowledge receipt and return by email to uog.bids@triton.uog.edu

_____

(Print/Sign) Date

cc: Procurement Files

Nel Bangayan

From: Nel Bangayan
Sent: Monday, December 06, 2021 6:23 PM
To: eggumataotao@triton.uog.edu
Cc: 'procurementoffice@triton.uog.edu'
Subject: UOG Bid Result - IFB B21-17

December 6, 2021

Hi Emily, the bid had just finished this afternoon. I was surprise how fast the Intent to Award was issued. I would like to request thru Sunshine Act FOIA the submittal copy of Tony's Workshop and JWS including the ACCU Unit Brochures. I appreciate your advice when it is available for pick up.
Thank you.

Nelia Bangayan
All Business Enterprises Corp
Mobile: 671 483-8310

Gene Bangayan

From: Gene Bangayan
Sent: Tuesday, December 7, 2021 4:55 PM
To: Gumataotao, Emily
Cc: Procurement Office
Subject: BID IFB B21-17

EMILY, on behalf of wife and her company, All business Enterprises Corporation I just consulted our corporate adviser of All Business Enterprises Corporation
with regards on my wife email to you on the Sunshine Act, " FOIA" and according to the advice the request serve as a protect and that you can't award until
you satisfy the Sunshine Act, " FOIA ". My wife emailed you requesting Tony's work Shop submittal and the brochures that you had asked to Tony' Work Shop
and also the JWS submittal. We appreciate your advice on the matter.
Thank you.
Gene M. Bangayan

Gene Bangayan

From: Gene Bangayan
Sent: Thursday, December 9, 2021 3:19 PM
To: Gumataotao, Emily
Cc: Procurement Office
Subject: FW: BID IFB B21-17

Ms. Emily, this to follow if your received our email below, dated 12-7-21. This follow up serve as our legal and final protest and we hope you will response on our FOIA on Tony's Work Shop submittal and its brochures material data and same with JWS too. We appreciate your immediate response on this matter.
Thank you.
Gene M. Bangayan

CC: Corporate Lawyer.

From: Gene Bangayan
Sent: Tuesday, December 7, 2021 4:55 PM
To: Gumataotao, Emily <eggumataotao@triton.uog.edu>
Cc: Procurement Office <procurementoffice@triton.uog.edu>
Subject: BID IFB B21-17

EMILY, on behalf of wife and her company, All business Enterprises Corporation I just consulted our corporate adviser of All Business Enterprises Corporation
with regards on my wife email to you on the Sunshine Act, " FOIA" and according to the advice the request serve as a protect and that you can't award until
you satisfy the Sunshine Act, " FOIA ". My wife emailed you requesting Tony's work Shop submittal and the brochures that you had asked to Tony' Work Shop
and also the JWS submittal. We appreciate your advice on the matter.
Thank you.
Gene M. Bangayan

UNIVERSITY OF GUAM
UNIBETSEDÅT GUAHAN

OFFICE OF THE PRESIDENT
Legal Counsel

VIA-ELECTRONIC MAIL
Nelia Bangayan
All Business Enterprises Corp.
(671) 483-8310

December 13, 2021

RE: Response to Sunshine Reform Act Request dated December 6, 2021

Dear Ms. Bangayan,

I have reviewed your email dated December 6, 2021, requesting, pursuant to Guam's Sunshine Reform Act of 1999, as codified in 5 G.C.A. §10103 *et. seq.*, copies of various documents. Pursuant to 5 G.C.A. §10103(a), (d), and (e), the documents in UOG's possession, responsive to the foregoing request will be available for your inspection from 12:00 p.m. to 5:00 p.m. on Monday, December 13, 2021 at the UOG General Counsel's Office located in Office of the President, 303 University Drive, UOG Station, Mangilao, Guam, 96913. Be advised that pursuant to 5 G.C.A. §10103(c), you may receive copies of the aforementioned records only after you pay the fees covering the direct costs of duplication.

Please contact me at 735-2990 if you have any questions.

Sincerely,

Anthony R. Camacho

ANTHONY R. CAMACHO, ESQ.
UOG General Counsel

Unit Report For 20RFK BUILDING FIRST FLOOR MAIN ENTRANCE 112321

Project: HA-1702-21-11 UOG IFB B21-17 PURCHASING HVAC EQUIP
Prepared By: BERNARD LLARENAS

02:16PM

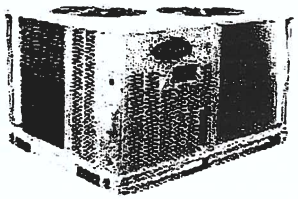

Outdoor Unit Parameters

Unit Quantity	1	
Unit Model	38AUD	
Unit Size	15 Tons	
Voltage	208-3-60	V-Ph-Hz
Condenser Coil	Cu/Cu	
No. of Stages	Dual Stage	

System Parameter

System Quantity	1	
Refrigerant Type	PURON	
Compressor Quantity	2	
Compressor Type	Scroll	
Std. Capacity Steps	50, 100	
Std. Min. Outdoor Temp(Cooling)	35.0	°F
No. of Outdoor fans	3	

Outdoor Unit Dimensions and Weight

Unit Length	7' 2.4"	
Unit Width	3' 7.4"	
Unit Height	4' 2.4"	
Unit Shipping Weight	731	lb
Unit Operating Weight	731	lb

Warranty Information Outdoor (Note: for US & Canada only)

First Year - Parts Only (Standard)

NOTE: Please see Warranty Catalog 808-218 for explanation of policies and ordering methods.

Ordering Information

Part Number	Description	Quantity
Base Unit - Outdoor		
38AUDA16A0E5-0A0A0		
	Base Unit	1
	Cu/Cu Condensing Coil	
	Standard Refrigerant Options	1
	Service Options - None	1
	Electrical Options - None	1
	Packaging Options - Standard	1
	Standard Electrical Mechanical Controls	1
	Refrig Circ/Compressor Staging - Two Circuits/ Dual Stage	1
Accessories		
EF680035	Liquid Line Solenoid Valve for Outdoor Unit	2
EF680037	Liquid Line Solenoid Valve for Outdoor Unit	2

Unit Report For 7.5RFK BUILDING FIRST FLOOR AV ROOM 112321

Project: HA-1702-21-11 UOG IFB B21-17 PURCHASING HVAC EQUIP
Prepared By: BERNARD LLARENAS

02:16PM

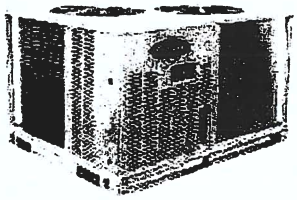

Outdoor Unit Parameters

Unit Quantity	1	
Unit Model	38AUD	
Unit Size	15 Tons	
Voltage	208-3-60	V-Ph-Hz
Condenser Coil	Cu/Cu	
No. of Stages	Dual Stage	

System Parameter

System Quantity	1	
Refrigerant Type	PURON	
Compressor Quantity	2	
Compressor Type	Scroll	
Std. Capacity Steps	50, 100	
Std. Min. Outdoor Temp(Cooling)	35.0	°F
No. of Outdoor fans	3	

Outdoor Unit Dimensions and Weight

Unit Length	7' 2.4"	
Unit Width	3' 7.4"	
Unit Height	4' 2.4"	
Unit Shipping Weight	731	lb
Unit Operating Weight	731	lb

Warranty Information Outdoor (Note: for US & Canada only)

First Year - Parts Only (Standard)

NOTE: Please see Warranty Catalog 808-218 for explanation of policies and ordering methods.

Ordering Information

Part Number	Description	Quantity
Base Unit - Outdoor		
38AUDA16A0E5-0A0A0		
	Base Unit	1
	Cu/Cu Condensing Coil	
	Standard Refrigerant Options	1
	Service Options - None	1
	Electrical Options - None	1
	Packaging Options - Standard	1
	Standard Electrical Mechanical Controls	1
	Refrig Circ/Compressor Staging - Two Circuits/ Dual Stage	1
Accessories		1
EF680035	Liquid Line Solenoid Valve for Outdoor Unit	
EF680037	Liquid Line Solenoid Valve for Outdoor Unit	2
		2

Unit Report For 7.5RFK BUILDING FIRST FLOOR OFFICES 112321

Project: HA-1702-21-11 UOG IFB B21-17 PURCHASING HVAC EQUIP
Prepared By: BERNARD LLARENAS

02:16PM

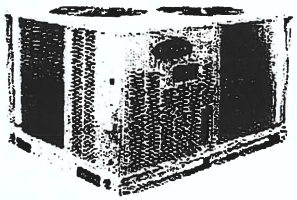

Outdoor Unit Parameters

Unit Quantity	1	
Unit Model	38AUD	
Unit Size	20 Tons	
Voltage	208-3-60	V-Ph-Hz
Condenser Coil	Cu/Cu	
No. of Stages	Dual Stage	

System Parameter

System Quantity	1	
Refrigerant Type	PURON	
Compressor Quantity	2	
Compressor Type	Scroll	
Std. Capacity Steps	50, 100	
Std. Min. Outdoor Temp(Cooling)	35.0	°F
No. of Outdoor fans	4	

Outdoor Unit Dimensions and Weight

Unit Length	7' 2.1"	
Unit Width	5' 7.1"	
Unit Height	4' 2.4"	
Unit Shipping Weight	978	lb
Unit Operating Weight	978	lb

Warranty Information Outdoor (Note: for US & Canada only)

First Year - Parts Only (Standard)

NOTE: Please see Warranty Catalog 808-218 for explanation of policies and ordering methods.

Ordering Information

Part Number	Description	Quantity
Base Unit - Outdoor		
38AUDA25A0E5-0A0A0		
	Base Unit	1
	Cu/Cu Condensing Coil	
	Standard Refrigerant Options	1
	Service Options - None	1
	Electrical Options - None	1
	Packaging Options - Standard	1
	Standard Electrical Mechanical Controls	1
	Refrig Circ/Compressor Staging - Two Circuits/ Dual Stage	1
Accessories		
EF680035	Liquid Line Solenoid Valve for Outdoor Unit	2
EF680037	Liquid Line Solenoid Valve for Outdoor Unit	2

Unit Report For PIP (GLE) SECOND FLOOR 112321

Project: HA-1702-21-11 UOG IFB B21-17 PURCHASING HVAC EQUIP
Prepared By: BERNARD LLARENAS

02:16PM

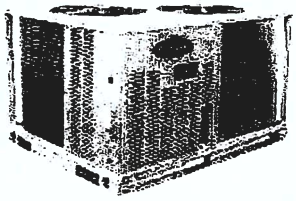

Outdoor Unit Parameters

Unit Quantity	1	
Unit Model	38AUD	
Unit Size	20 Tons	
Voltage	208-3-60	V-Ph-Hz
Condenser Coil	Cu/Cu	
No. of Stages	Dual Stage	

System Parameter

System Quantity	1	
Refrigerant Type	PURON	
Compressor Quantity	2	
Compressor Type	Scroll	
Std. Capacity Steps	50, 100	
Std. Min. Outdoor Temp(Cooling)	35.0	°F
No. of Outdoor fans	4	

Outdoor Unit Dimensions and Weight

Unit Length	7' 2.1"	
Unit Width	5' 7.1"	
Unit Height	4' 2.4"	
Unit Shipping Weight	978	lb
Unit Operating Weight	978	lb

Warranty Information Outdoor (Note: for US & Canada only)

First Year - Parts Only (Standard)

NOTE: Please see Warranty Catalog 808-218 for explanation of policies and ordering methods.

Ordering Information

Part Number	Description	Quantity
Base Unit - Outdoor		
38AUDA25A0E5-0A0A0		
	Base Unit	1
	Cu/Cu Condensing Coil	
	Standard Refrigerant Options	1
	Service Options - None	1
	Electrical Options - None	1
	Packaging Options - Standard	1
	Standard Electrical Mechanical Controls	1
	Refrig Circ/Compressor Staging - Two Circuits/ Dual Stage	1
Accessories		1
EF680035	Liquid Line Solenoid Valve for Outdoor Unit	
EF680037	Liquid Line Solenoid Valve for Outdoor Unit	2
		2

Unit Report For 20SCIENCE BUILDING THIRD FLOOR 112321

Project: HA-1702-21-11 UOG IFB B21-17 PURCHASING HVAC EQUIP
Prepared By: BERNARD LLARENAS

02:16PM

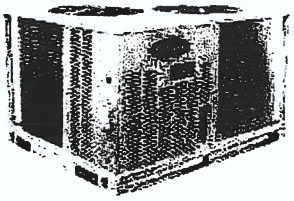

Outdoor Unit Parameters

Unit Quantity	1	
Unit Model	38AUD	
Unit Size	20 Tons	
Voltage	208-3-60	V-Ph-Hz
Condenser Coil	Cu/Cu	
No. of Stages	Dual Stage	

System Parameter

System Quantity	1	
Refrigerant Type	PURON	
Compressor Quantity	2	
Compressor Type	Scroll	
Std. Capacity Steps	50, 100	
Std. Min. Outdoor Temp(Cooling)	35.0	°F
No. of Outdoor fans	4	

Outdoor Unit Dimensions and Weight

Unit Length	7' 2.1"	
Unit Width	5' 7.1"	
Unit Height	4' 2.4"	
Unit Shipping Weight	978	lb
Unit Operating Weight	978	lb

Warranty Information Outdoor (Note: for US & Canada only)

First Year - Parts Only (Standard)

NOTE: Please see Warranty Catalog 808-218 for explanation of policies and ordering methods.

Ordering Information

Part Number	Description	Quantity
Base Unit - Outdoor		
38AUDA25A0E5-0A0A0		
	Base Unit	1
	Cu/Cu Condensing Coil	
	Standard Refrigerant Options	1
	Service Options - None	1
	Electrical Options - None	1
	Packaging Options - Standard	1
	Standard Electrical Mechanical Controls	1
	Refrig Circ/Compressor Staging - Two Circuits/ Dual Stage	1
Accessories		
EF680035	Liquid Line Solenoid Valve for Outdoor Unit	2
EF680037	Liquid Line Solenoid Valve for Outdoor Unit	2

Unit Report For LECTURE HALL AUDITORIUM 112321

Project: HA-1702-21-11 UOG IFB B21-17 PURCHASING HVAC EQUIP
Prepared By: BERNARD LLARENAS

02:16PM

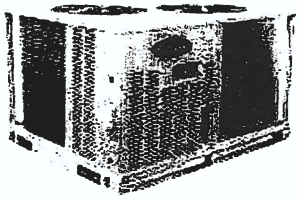

Outdoor Unit Parameters

Unit Quantity	1	
Unit Model	38AUD	
Unit Size	20 Tons	
Voltage	208-3-60	V-Ph-Hz
Condenser Coil	Cu/Cu	
No. of Stages	Dual Stage	

System Parameter

System Quantity	1	
Refrigerant Type	PURON	
Compressor Quantity	2	
Compressor Type	Scroll	
Std Capacity Steps	50, 100	
Std Min Outdoor Temp(Cooling)	35.0	°F
No. of Outdoor fans	4	

Outdoor Unit Dimensions and Weight

Unit Length	7' 2.1"	
Unit Width	5' 7.1"	
Unit Height	4' 2.4"	
Unit Shipping Weight	978	lb
Unit Operating Weight	978	lb

Warranty Information Outdoor (Note: for US & Canada only)

First Year - Parts Only (Standard)

NOTE: Please see Warranty Catalog 808-218 for explanation of policies and ordering methods.

Ordering Information

Part Number	Description	Quantity
Base Unit - Outdoor		
38AUDA25A0E5-0A0A0		
	Base Unit	1
	Cu/Cu Condensing Coil	
	Standard Refrigerant Options	1
	Service Options - None	1
	Electrical Options - None	1
	Packaging Options - Standard	1
	Standard Electrical Mechanical Controls	1
	Refrig Circ/Compressor Staging - Two Circuits/ Dual Stage	1
Accessories		
EF680035	Liquid Line Solenoid Valve for Outdoor Unit	2
EF680037	Liquid Line Solenoid Valve for Outdoor Unit	2

TECHNICAL REPORT

Project name	OOG condensers				
Submitted by	Leo				
Customer	JWS			Date	11/22/2021
OVERVIEW				Quantity	1
System Type	Air-Cooled Split		Refrigerant		R410A
Series	ACCS		Power supply		460V/3/60HZ
Unit nomenclature	6ACCS700-QG + 6EB700D-QG				
Altitude	0	ft	Approval		
FILTER					
Type	Filter 1" 70% Eff				
Size (Qty)	20x25x1(3), 25x25x1(6)				
DX COOLING COIL					
Type	Ø1/2		Number of coil	1	
Rows	4		Face area	34.03	ft²
Fins per inch	10		Face velocity	505	ft/min
Refrigerant	R410A		Entering air (DB)	80	°F
Capacity (Total)	640800	Btu/h	Entering air (WB)	67	°F
Capacity (Sensible)	442555	Btu/h	Leaving air (DB)	55.9	°F
Air pressure drop	0.6	inH2O	Leaving air (WB)	54.7	°F
COMPRESSOR (OR EQUIVALENT MODELS)					
Compressor					
Type	Scroll, Fixed Speed		Quantity	2 X ZP154 TDM	
Total LRA	600.0	A	Total Power	4	
			Total Amps	49.8	kW
FAN (EVAPORATOR)				74.9	A
Type	Belt Driven		Model	560	
Air Flow	17200	CFM	Fan Speed	630	RPM
External Static Pressure	0.5	inH2O	Absorbed Power	7.2	kW
Total Static Pressure	1.5	inH2O	Motor Horsepower	15	HP
Quantity	1		FLA	19.9	A
			Locked rotor current (LRA)	129.1	A
CONDENSER (AIR COOLED)					
Model	Ø3/8		Motor HP (each)	2 2/3	HP
Quantity	1		FLA (each)	4	A
Condenser Fan Motor	800MM		Ambient Temperature	95	°F
Quantity	3				
ELECTRICAL SUMMARY					
Unit FLA	106.8	A	MCA	111.5	A
Total Power Input	63.68	kW	MFS	150	A
EER	10.06		IEER	n/a	

OPTIONS

DESCRIPTION

SV: Suction/Discharge/Liquid Line Service Valves
CU-C: Condenser Coil Fin Materials - Copper
CG: Condenser Coil Guard
DOL2: IEC DOL (Non UL)
MII: Door Interlock Main Incoming Isolator
PFR: UVR/Phase Failure Protect
IR33: Controller - IR33

NOTES

Manufacturer reserves the right to change specifications without prior notice.

TECHNICAL REPORT

Project name	OOG condensers				
Submitted by	Leo				
Customer	JWS			Date	11/22/2021
OVERVIEW				Quantity	1
System Type	Air-Cooled Split		Refrigerant		R410A
Series	ACCS		Power supply		208V/3/60HZ
Unit nomenclature	6ACCS220-QG + 6HEB220D-QG				
Altitude	0	ft	Approval		
FILTER					
Type	Filter 1" 70% Eff				
Size (Qty)	25x20x1(1), 25x25x1(2)				
DX COOLING COIL					
Type	Ø3/8		Number of coil	1	
Rows	3		Face area	13.22	ft²
Fins per inch	12		Face velocity	408	ft/min
Refrigerant	R410A		Entering air (DB)	80	°F
Capacity (Total)	190397	Btu/h	Entering air (WB)	67	°F
Capacity (Sensible)	134438	Btu/h	Leaving air (DB)	56.8	°F
Air pressure drop	0.3	inH2O	Leaving air (WB)	55.4	°F
COMPRESSOR (OR EQUIVALENT MODELS)					
Compressor					
Type	Scroll, Fixed Speed		Quantity	ZP182	
Total LRA	340.0	A	Total Power	1	
			Total Amps	15.7	kW
				51	A
FAN (EVAPORATOR)					
Type	Belt Driven		Model	15/15	
Air Flow	5400	CFM	Fan Speed	772	RPM
External Static Pressure	0.5	inH2O	Absorbed Power	1.6	kW
Total Static Pressure	1.2	inH2O	Motor Horsepower	3	HP
Quantity	1		FLA	10.3	A
			Locked rotor current (LRA)	64	A
CONDENSER (AIR COOLED)					
Model	Ø3/8		Motor HP (each)	1	HP
Quantity	1		FLA (each)	2.9	A
Condenser Fan Motor	26" (660MM)		Ambient Temperature	95	°F
Quantity	2				
ELECTRICAL SUMMARY					
Unit FLA	67.1	A	MCA	79.9	A
Total Power Input	18.89	kW	MFS	150	A
EER	10.08		IEER	n/a	
OPTIONS					
DESCRIPTION					
SV: Suction/Discharge/Liquid Line Service Valves					
CU-C: Condenser Coil Fin Materials - Copper					
CG: Condenser Coil Guard					
DOL2: IEC DOL (Non UL)					
MII: Door Interlock Main Incoming Isolator					
PFR: UVR/Phase Failure Protect					
IR33: Controller - IR33					
NOTES					
Manufacturer reserves the right to change specifications without prior notice.					

TECHNICAL REPORT

Project name	OOG condensers				
Submitted by	Leo				
Customer	JWS			Date	11/22/2021
OVERVIEW				Quantity	1
System Type	Air-Cooled Split		Refrigerant		R410A
Series	ACCS		Power supply		460V/3/60HZ
Unit nomenclature	6ACCS290-QG + 6EB290D-QG				
Altitude	0	ft	Approval		
FILTER					
Type	Filter 1" 70% Eff				
Size (Qty)	25x16x1(3), 25x20x1(3)				
DX COOLING COIL					
Type	Ø3/8		Number of coil	1	
Rows	3		Face area	16.53	ft²
Fins per inch	12		Face velocity	454	ft/min
Refrigerant	R410A		Entering air (DB)	80	°F
Capacity (Total)	253522	Btu/h	Entering air (WB)	67	°F
Capacity (Sensible)	181867	Btu/h	Leaving air (DB)	57.4	°F
Air pressure drop	0.4	inH2O	Leaving air (WB)	55.9	°F
COMPRESSOR (OR EQUIVALENT MODELS)					
Compressor					
Type	Scroll, Fixed Speed		Quantity	2 X ZP122	
Total LRA	280.0	A	Total Power	2	
			Total Amps	22.5	kW
				34.3	A
FAN (EVAPORATOR)					
Type	Belt Driven		Model	18/13	
Air Flow	7500	CFM	Fan Speed	693	RPM
External Static Pressure	0.5	inH2O	Absorbed Power	2.9	kW
Total Static Pressure	1.3	inH2O	Motor Horsepower	5.5	HP
Quantity	1		FLA	8.2	A
			Locked rotor current (LRA)	50.5	A
CONDENSER (AIR COOLED)					
Model	Ø3/8		Motor HP (each)	1	HP
Quantity	1		FLA (each)	1.6	A
Condenser Fan Motor	26" (660MM)		Ambient Temperature	95	°F
Quantity	2				
ELECTRICAL SUMMARY					
Unit FLA	45.7	A	MCA	50	A
Total Power Input	27.04	kW	MFS	70	A
EER	9.38		IEER	n/a	
OPTIONS					

DESCRIPTION

SV: Suction/Discharge/Liquid Line Service Valves
CU-C: Condenser Coil Fin Materials - Copper
CG: Condenser Coil Guard
DOL2: IEC DOL (Non UL)
MII: Door Interlock Main Incoming Isolator
PFR: UVR/Phase Failure Protect
IR33: Controller - IR33

NOTES

Manufacturer reserves the right to change specifications without prior notice.

TECHNICAL REPORT

Project name	OOG condensers				
Submitted by	Leo				
Customer	JWS			Date	11/22/2021
OVERVIEW				Quantity	1
System Type	Air-Cooled Split		Refrigerant		R410A
Series	ACCS		Power supply		460V/3/60HZ
Unit nomenclature	6ACCS435-QG + 6EB435D-QG				
Altitude	0	ft	Approval		
FILTER					
Type	Filter 1" 70% Eff				
Size (Qty)	20x25x1(3), 25x25x1(3)				
DX COOLING COIL					
Type	Ø3/8		Number of coil	1	
Rows	3		Face area	21.39	ft²
Fins per inch	13		Face velocity	538	ft/min
Refrigerant	R410A		Entering air (DB)	80	°F
Capacity (Total)	377724	Btu/h	Entering air (WB)	67	°F
Capacity (Sensible)	274677	Btu/h	Leaving air (DB)	57.7	°F
Air pressure drop	0.5	inH2O	Leaving air (WB)	56.3	°F
COMPRESSOR (OR EQUIVALENT MODELS)					
Compressor					
Type	Scroll, Fixed Speed		Quantity	2 X ZP182	
Total LRA	358.0	A	Total Power	2	
			Total Amps	31.2	kW
				50.6	A
FAN (EVAPORATOR)					
Type	Belt Driven		Model	450	
Air Flow	11500	CFM	Fan Speed	763	RPM
External Static Pressure	0.5	inH2O	Absorbed Power	5.4	kW
Total Static Pressure	1.4	inH2O	Motor Horsepower	10	HP
Quantity	1		FLA	14.4	A
			Locked rotor current (LRA)	85.7	A
CONDENSER (AIR COOLED)					
Model	Ø3/8		Motor HP (each)	1	HP
Quantity	1		FLA (each)	1.6	A
Condenser Fan Motor	26" (660MM)		Ambient Temperature	95	°F
Quantity	3				
ELECTRICAL SUMMARY					
Unit FLA	69.8	A	MCA	76.1	A
Total Power Input	39.02	kW	MFS	125	A
EER	9.68		IEER	n/a	

OPTIONS

DESCRIPTION

SV: Suction/Discharge/Liquid Line Service Valves
CU-C: Condenser Coil Fin Materials - Copper
CG: Condenser Coil Guard
DOL2: IEC DOL (Non UL)
MII: Door Interlock Main Incoming Isolator
PFR: UVR/Phase Failure Protect
IR33: Controller - IR33

NOTES

Manufacturer reserves the right to change specifications without prior notice.

TECHNICAL REPORT

Project name	OOG condensers				
Submitted by	Leo				
Customer	JWS			Date	11/22/2021
				Quantity	1
OVERVIEW					
System Type	Air-Cooled Split		Refrigerant	R410A	
Series	ACCS		Power supply	208V/3/60HZ	
Unit nomenclature	6ACCS290-QG + 6EB290D-QG				
Altitude	0	ft	Approval		
FILTER					
Type	Filter 1" 70% Eff				
Size (Qty)	25x16x1(3), 25x20x1(3)				
DX COOLING COIL					
Type	Ø3/8		Number of coil	1	
Rows	3		Face area	16.53	ft²
Fins per inch	12		Face velocity	454	ft/min
Refrigerant	R410A		Entering air (DB)	80	°F
Capacity (Total)	249769	Btu/h	Entering air (WB)	67	°F
Capacity (Sensible)	180502	Btu/h	Leaving air (DB)	57.6	°F
Air pressure drop	0.4	inH2O	Leaving air (WB)	56.1	°F
COMPRESSOR (OR EQUIVALENT MODELS)					
Compressor				2 X ZP122	
Type	Scroll, Fixed Speed		Quantity	2	
Total LRA	480.0	A	Total Power	22.9	kW
			Total Amps	63.7	A
FAN (EVAPORATOR)					
Type	Belt Driven		Model	18/13	
Air Flow	7500	CFM	Fan Speed	693	RPM
External Static Pressure	0.5	inH2O	Absorbed Power	2.9	kW
Total Static Pressure	1.3	inH2O	Motor Horsepower	5.5	HP
Quantity	1		FLA	18.1	A
			Locked rotor current (LRA)	112	A
CONDENSER (AIR COOLED)					
Model	Ø3/8		Motor HP (each)	1	HP
Quantity	1		FLA (each)	2.9	A
Condenser Fan Motor	26" (660MM)		Ambient Temperature	95	°F
Quantity	2				
ELECTRICAL SUMMARY					
Unit FLA	87.6	A	MCA	95.5	A
Total Power Input	27.3	kW	MFS	150	A
EER	9.15		IEER	n/a	

OPTIONS

DESCRIPTION

- SV: Suction/Discharge/Liquid Line Service Valves
- CU-C: Condenser Coil Fin Materials - Copper
- SSD: Stainless Steel Drain Pan
- CG: Condenser Coil Guard
- DOL2: IEC DOL (Non UL)
- MII: Door Interlock Main Incoming Isolator
- PFR: UVR/Phase Failure Protect
- IR33: Controller - IR33

NOTES

Manufacturer reserves the right to change specifications without prior notice.

TECHNICAL REPORT

Project name	OOG condensers				
Submitted by	Leo				
Customer	JWS			Date	11/22/2021
OVERVIEW				Quantity	1
System Type	Air-Cooled Split		Refrigerant		R410A
Series	ACCS		Power supply		208V/3/60HZ
Unit nomenclature	6ACCS435-QG + 6EB435D-QG				
Altitude	0	ft	Approval		
FILTER					
Type	Filter 1" 70% Eff				
Size (Qty)	20x25x1(3), 25x25x1(3)				
DX COOLING COIL					
Type	Ø3/8		Number of coil	1	
Rows	3		Face area	21.39	ft²
Fins per inch	13		Face velocity	538	ft/min
Refrigerant	R410A		Entering air (DB)	80	°F
Capacity (Total)	376700	Btu/h	Entering air (WB)	67	°F
Capacity (Sensible)	273995	Btu/h	Leaving air (DB)	57.7	°F
Air pressure drop	0.5	inH2O	Leaving air (WB)	56.3	°F
COMPRESSOR (OR EQUIVALENT MODELS)					
Compressor					
Type	Scroll, Fixed Speed		Quantity	2 X ZP182	
Total LRA	680.0	A	Total Power	2	
			Total Amps	32.1	kW
FAN (EVAPORATOR)				103.6	A
Type	Belt Driven		Model	450	
Air Flow	11500	CFM	Fan Speed	762	RPM
External Static Pressure	0.5	inH2O	Absorbed Power	5.4	kW
Total Static Pressure	1.4	inH2O	Motor Horsepower	10	HP
Quantity	1		FLA	31.8	A
			Locked rotor current (LRA)	190.1	A
CONDENSER (AIR COOLED)					
Model	Ø3/8		Motor HP (each)	1	HP
Quantity	1		FLA (each)	2.9	A
Condenser Fan Motor	26" (660MM)		Ambient Temperature	95	°F
Quantity	3				
ELECTRICAL SUMMARY					
Unit FLA	144.1	A	MCA	157	A
Total Power Input	39.8	kW	MFS	225	A
EER	9.47		IEER	n/a	

OPTIONS

DESCRIPTION

SV: Suction/Discharge/Liquid Line Service Valves
CU-C: Condenser Coil Fin Materials - Copper
CG: Condenser Coil Guard
DOL2: IEC DOL (Non UL)
MII: Door Interlock Main Incoming Isolator
PFR: UVR/Phase Failure Protect
IR33: Controller - IR33

NOTES

Manufacturer reserves the right to change specifications without prior notice.

TECHNICAL REPORT

Project name	OOG condensers				
Submitted by	Leo				
Customer	JWS			Date	11/22/2021
OVERVIEW				Quantity	1
System Type	Air-Cooled Split		Refrigerant		R410A
Series	ACCS		Power supply		208V/3/60HZ
Unit nomenclature	6ACCS570-QG + 6EB570D-QG				
Altitude	0	ft	Approval		
FILTER					
Type	Filter 1" 70% Eff				
Size (Qty)	20x25x1(9)				
DX COOLING COIL					
Type	Ø3/8		Number of coil	1	
Rows	3		Face area	29.17	ft²
Fins per inch	12		Face velocity	514	ft/min
Refrigerant	R410A		Entering air (DB)	80	°F
Capacity (Total)	497149	Btu/h	Entering air (WB)	67	°F
Capacity (Sensible)	357934	Btu/h	Leaving air (DB)	57.7	°F
Air pressure drop	0.5	inH2O	Leaving air (WB)	56.3	°F
COMPRESSOR (OR EQUIVALENT MODELS)					
Compressor					
Type	Scroll, Fixed Speed		Quantity	2 X ZP154 + ZP182	
Total LRA	2x300 1x340	A	Total Power	3	
			Total Amps	44.2	kW
				137.4	A
FAN (EVAPORATOR)					
Type	Belt Driven		Model	500	
Air Flow	15000	CFM	Fan Speed	727	RPM
External Static Pressure	0.5	inH2O	Absorbed Power	7.2	kW
Total Static Pressure	1.4	inH2O	Motor Horsepower	15	HP
Quantity	1		FLA	44.2	A
			Locked rotor current (LRA)	286.1	A
CONDENSER (AIR COOLED)					
Model	Ø3/8		Motor HP (each)	1	HP
Quantity	1		FLA (each)	2.9	A
Condenser Fan Motor	26" (660MM)		Ambient Temperature	95	°F
Quantity	4				
ELECTRICAL SUMMARY					
Unit FLA	193.2	A	MCA	206.2	A
Total Power Input	54.42	kW	MFS	300	A
EER	9.14		IEER	n/a	

OPTIONS

DESCRIPTION

SV: Suction/Discharge/Liquid Line Service Valves
CU-C: Condenser Coil Fin Materials - Copper
CG: Condenser Coil Guard
DOL2: IEC DOL (Non UL)
MII: Door Interlock Main Incoming Isolator
PFR: UVR/Phase Failure Protect
IR33: Controller - IR33

NOTES

Manufacturer reserves the right to change specifications without prior notice.

TECHNICAL REPORT

Project name	OOG condensers				
Submitted by	Leo				
Customer	JWS			Date	11/22/2021
				Quantity	1
OVERVIEW					
System Type	Air-Cooled Split		Refrigerant	R410A	
Series	ACCS		Power supply	208V/3/60HZ	
Unit nomenclature	6ACCS700-QG + 6EB700D-QG				
Altitude	0	ft	Approval		
FILTER					
Type	Filter 1" 70% Eff				
Size (Qty)	20x25x1(3), 25x25x1(6)				
DX COOLING COIL					
Type	Ø1/2		Number of coil	1	
Rows	4		Face area	34.03	ft²
Fins per inch	10		Face velocity	505	ft/min
Refrigerant	R410A		Entering air (DB)	80	°F
Capacity (Total)	639094	Btu/h	Entering air (WB)	67	°F
Capacity (Sensible)	441872	Btu/h	Leaving air (DB)	56.1	°F
Air pressure drop	0.6	inH2O	Leaving air (WB)	54.7	°F
COMPRESSOR (OR EQUIVALENT MODELS)					
Compressor					
Type	Scroll, Fixed Speed		Quantity	2 X ZP154 TDM	
Total LRA	1200.0	A	Total Power	4	
			Total Amps	51.8	kW
				161.3	A
FAN (EVAPORATOR)					
Type	Belt Driven		Model	560	
Air Flow	17200	CFM	Fan Speed	630	RPM
External Static Pressure	0.5	inH2O	Absorbed Power	7.2	kW
Total Static Pressure	1.5	inH2O	Motor Horsepower	15	HP
Quantity	1		FLA	44.2	A
			Locked rotor current (LRA)	286.1	A
CONDENSER (AIR COOLED)					
Model	Ø3/8		Motor HP (each)	2 2/3	HP
Quantity	1		FLA (each)	7.5	A
Condenser Fan Motor	800MM		Ambient Temperature	95	°F
Quantity	3				
ELECTRICAL SUMMARY					
Unit FLA	228	A	MCA	238.1	A
Total Power Input	65.26	kW	MFS	300	A
EER	9.79		IEER	n/a	
OPTIONS					
DESCRIPTION					
SV: Suction/Discharge/Liquid Line Service Valves					
CU-C: Condenser Coil Fin Materials - Copper					
CG: Condenser Coil Guard					
DOL2: IEC DOL (Non UL)					
MII: Door Interlock Main Incoming Isolator					
PFR: UVR/Phase Failure Protect					
IR33: Controller - IR33					
NOTES					
Manufacturer reserves the right to change specifications without prior notice.					

TGI/ENG/CD/02 REV. 7 11/15

CERTIFIED DRAWING

COMP. : ZR 160 TDM(2) (R407C)
ZP 154 TDM(2) (R410A)
COIL SIZE : ø 3/8×4R×68THx144FLx12FPI (SLIT)
COND. CIR. : 4 T/C. (28+28) IN/OUT
SUBCOOL CIR. : 4 T/C. 6 IN/OUTx(2)
SUCTION ø : 1 5/8x(2)
LIQUID ø : 7/8x(2)
COND. FAN MTR : 2 2/3 HPx(3)
FAN ø : 805MMx(3)

CONDENSER WITH SLIT FINS
DOUBLE DOOR CONTROL PANEL
ALL DIMENSIONS ARE IN INCHES [MM]

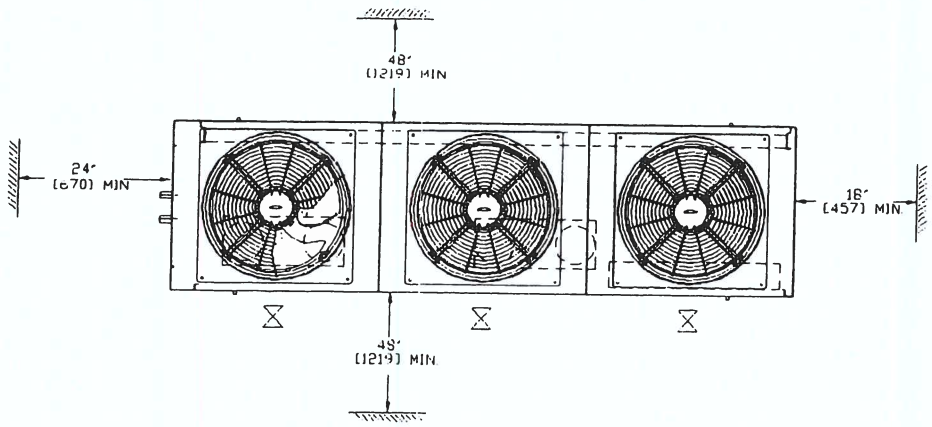

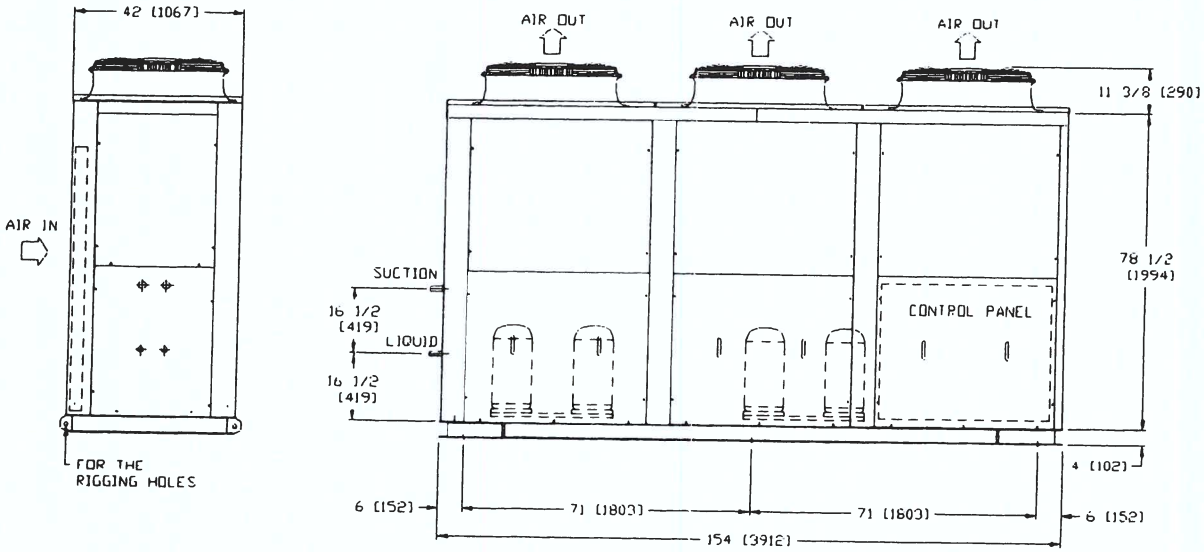

DRAWN BY	ALYN	DATE	21-09-2012
DESIGNED BY	JOSEPHW	DATE	20/12/2017
CHECKED BY		DATE	
APPROVED BY		DATE	

REV	DESCRIPTION	DATE	DRN BY
1.2	UPDATE R410A DATA	20.12.17	JOSEPH
1.1	CHANGE CONDENSER FAN TYPE. REVISE DRAWING	13.10.14	CHR

DB DUNHAM-BUSH INDUSTRIES SDN. BHD

LOCATION.

QTY.

MODEL 6ACCS 700-P/G

PROJECT STANDARD

TITLE

A/C CONDENSING UNIT

DRAWING NO 82449A-019 REV: 1.2

SCALE : N. T. S SHEET 1 OF 1

TGI/ENG/CD/02 REV. 7 11/15

CERTIFIED DRAWING

COMP. : ZR190 (407C) / ZP182 (410A)
COIL SIZE : ø 3/8x3Rx48THx62FLx10FPI (SLIT)
COND. CIR. : 6 T/C, 22 IN/OUT
SUBCOOL CIR. : 2 T/C, 8 IN/OUT
SUCTION ø : 1 3/8x(1)
LIQUID ø : 5/8x(1)
COND. FAN MTR : 1 HPx(2)
FAN ø : 660MM. x(2)

CONDENSER WITH SLIT FINS
DOUBLE DOOR CONTROL PANEL
ALL DIMENSIONS ARE IN INCHES [MM]

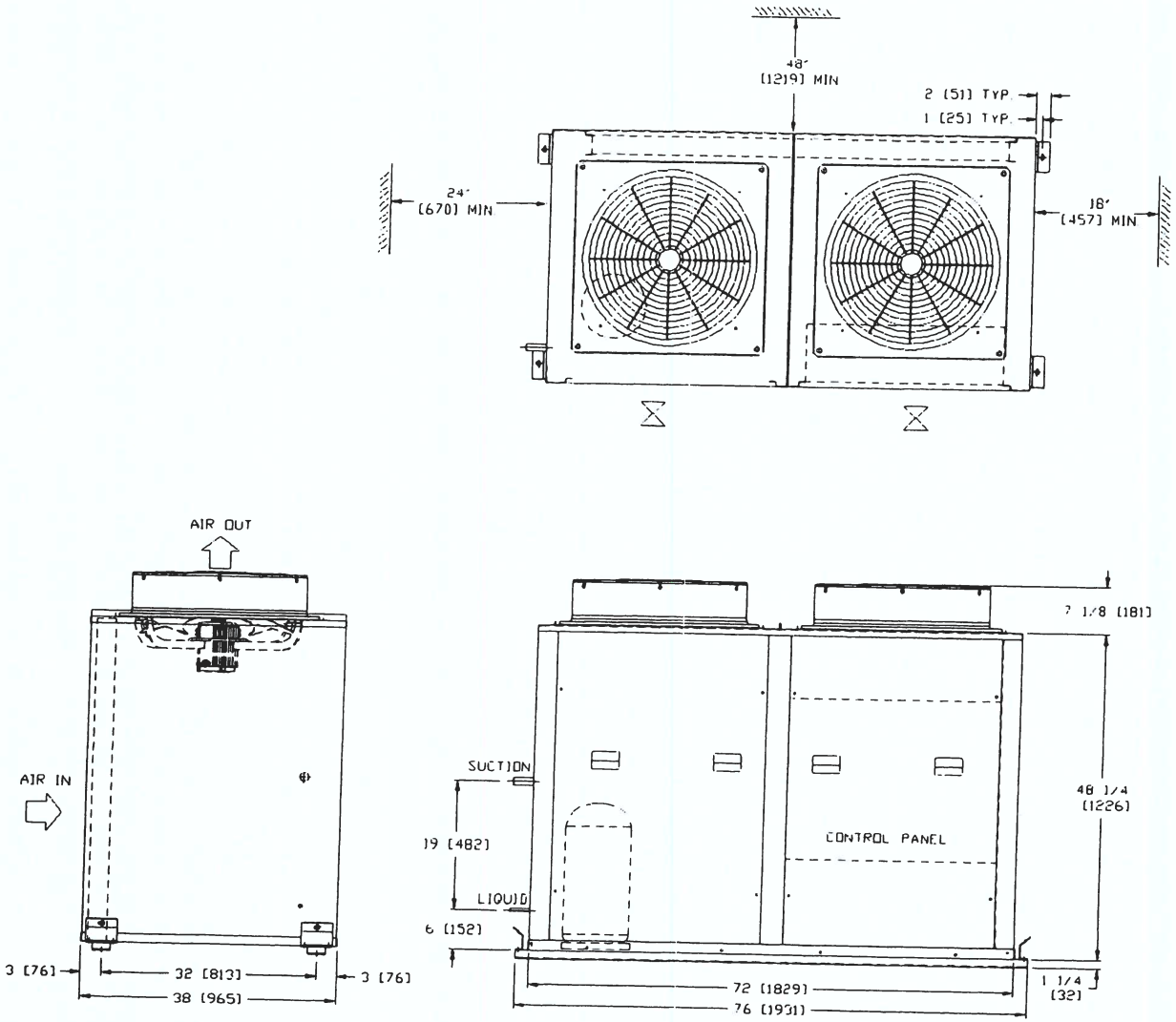

DRAWN BY	ALYN	DATE	19-09-2012
DESIGNED BY	JOSEPHW	DATE	20/12/2017
CHECKED BY		DATE	
APPROVED BY		DATE	

REV	DESCRIPTION	DATE	DRN BY
1.3	UPDATE R410A DATA	20.12.17	JOSEPH
1.2	UPDATE TEXT	15.3.17	N'din
1.1	CHANGE FAN TYPE	6.2.17	N'din

DB DUNHAM-BUSH INDUSTRIES SDN. BHD

LOCATION.

QTY.

MODEL 6ACCS 220-P/G

PROJECT STANDARD

TITLE A/C CONDENSING UNIT

DRAWING NO 82449A-009 REV: 1.3

SCALE : N.T.S SHEET 1 OF 1

TGI/ENG/CD/02 REV. 7 11/15

CERTIFIED DRAWING

COMP.	: ZR 125(2) (R407C) / ZP 122(2) (R410A)
COIL SIZE	: ø 3/8x4Rx48THx62FLx10FPI (SLIT)
COND. CIR.	: 8 T/C. 11 IN/OUTx(2)
SUBCOOL CIR	: 2 T/C. 4 IN/OUTx(2)
SUCTION ø	: 1 3/8x(2)
LIQUID ø	: 1/2x(2)
COND. FAN MTR	: 1 HPx(2)
FAN ø	: 660MM. x(2)

CONDENSER WITH SLIT FINS
DOUBLE DOOR CONTROL PANEL
ALL DIMENSIONS ARE IN INCHES [MM]

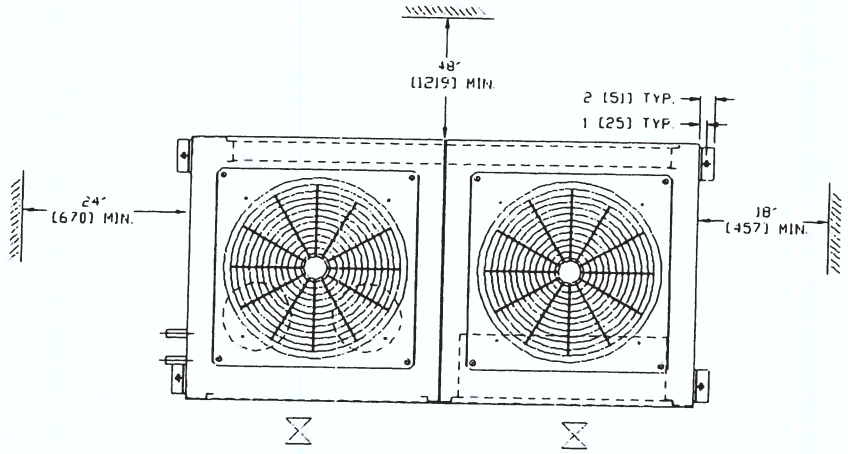

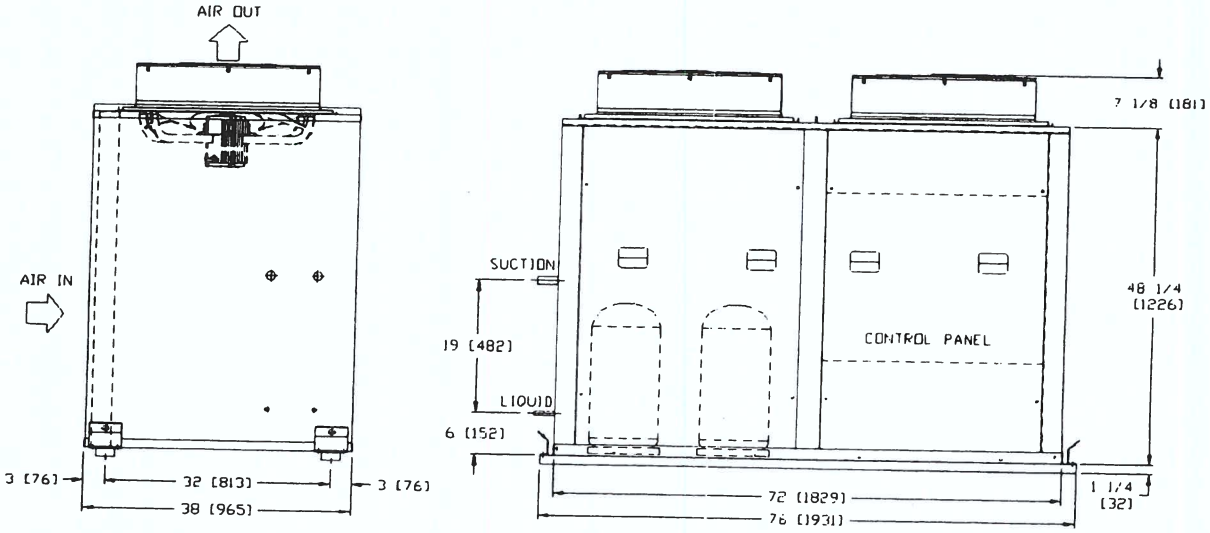

DRAWN BY	ALYN	DATE	20-09-2012
DESIGNED BY	JOSEPHW	DATE	20/12/2017
CHECKED BY		DATE	
APPROVED BY		DATE	

REV	DESCRIPTION	DATE	DRN BY
1.3	UPDATE R410A DATA	20.12.17	JOSEPH
1.2	UPDATE TEXT	15.3.17	N'din
1.1	CHANGE FAN TYPE	6.2.17	N'din

DB DUNHAM-BUSH INDUSTRIES SDN. BHD

LOCATION.

QTY.

MODEL 6ACCS 290-P/G

PROJECT STANDARD

TITLE A/C CONDENSING UNIT

DRAWING NO 82449A-011 REV: 1.3

SCALE : N. T. S SHEET 1 OF 1

TGI/ENG/CD/02 REV. 7 11/15

CERTIFIED DRAWING

COMP	: ZR 190(2) (R407C) / ZP 182(2) (R410A)
COIL SIZE	: ø 3/8x4Rx561Hx98FLx12FPI (SLIT)
COND. CIR.	: 4 T/C, (25+26) IN/OUT
SUBCOOL CIR.	: 2 T/C, (5+5) IN/OUT
SUCTION ø	: 1 3/8x(2)
LIQUID ø	: 5/8x(2)
COND. FAN MTR	: 1 HPx(3)
FAN ø	: 660MM. x(3)

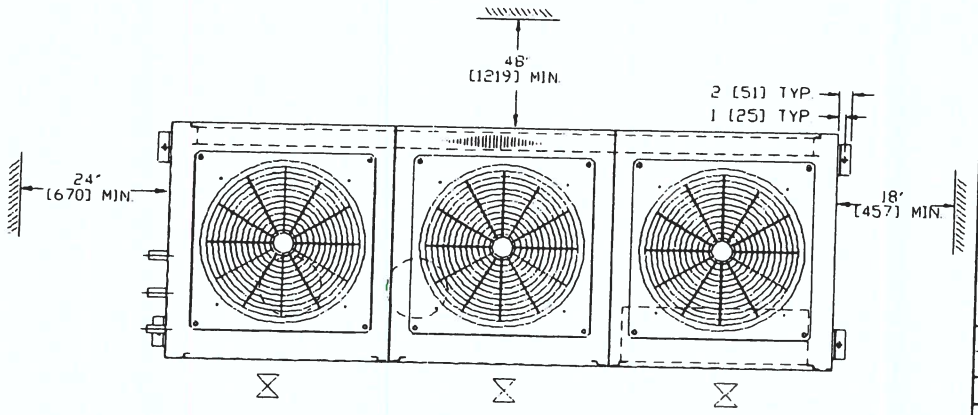

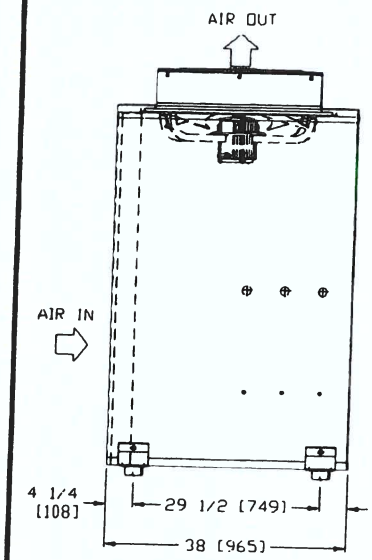

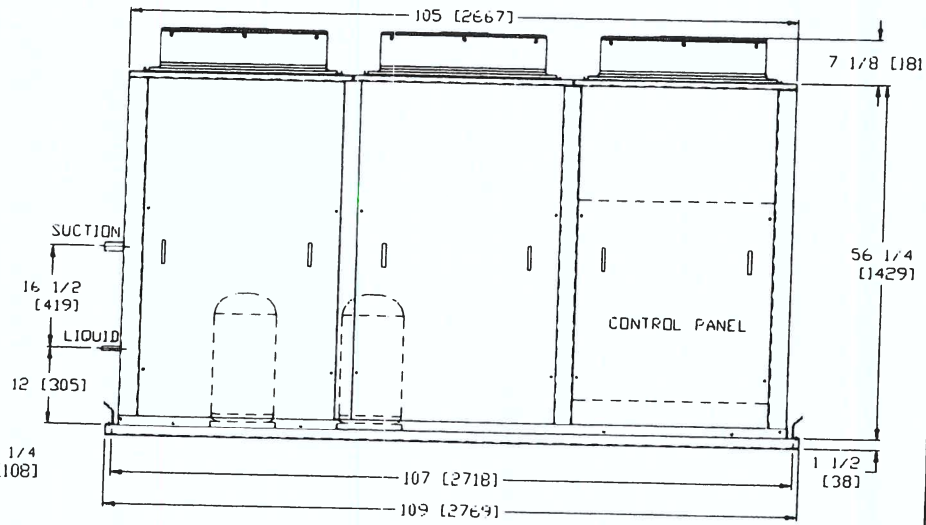

CONDENSER WITH SLIT FINS
DOUBLE DOOR CONTROL PANEL
ALL DIMENSIONS ARE IN INCHES [MM]

DRAWN BY	ALYN	DATE	21-09-2012
DESIGNED BY	JOSEPHW	DATE	20/12/2017
CHECKED BY		DATE	
APPROVED BY		DATE	

REV	DESCRIPTION	DATE	DRN BY
1.3	UPDATE R410A DATA	20.12.17	JOSEPH
1.2	UPDATE TEXT	15.3.17	N'din
1.1	CHANGE FAN TYPE	6.2.17	N'din

DB DUNHAM-BUSH INDUSTRIES SDN. BHD

LOCATION.

QTY.

MODEL 6ACCS 435-P/G

PROJECT STANDARD

TITLE A/C CONDENSING UNIT

DRAWING NO 82449A-014 REV: 1.3

SCALE : N. T. S SHEET 1 OF 1

DRAWING ACCS290

TGI/ENG/CD/02 REV 7 11/15

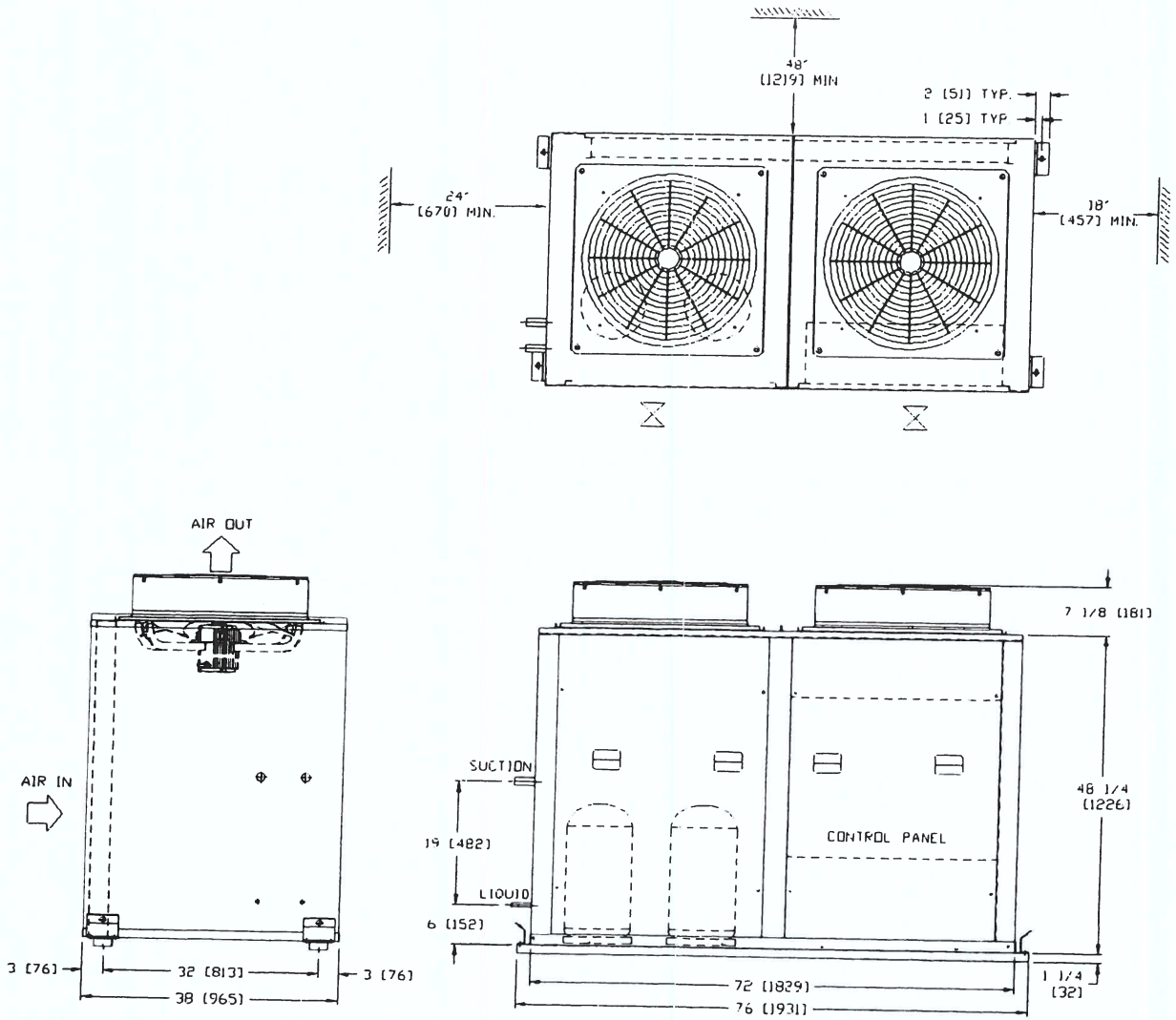

CERTIFIED DRAWING

COMP.	: ZR 125(2) (R407C) / ZP 122(2) (R410A)
COIL SIZE	: ø 3/8x4Rx48THx62FLx10FPI (SLIT)
COND. CIR.	: 8 T/C. 11 IN/OUTx(2)
SUBCOOL CIR	: 2 T/C. 4 IN/OUTx(2)
SUCTION ø	: 1 3/8x(2)
LIQUID ø	: 1/2x(2)
COND. FAN MTR	: 1 HPx(2)
FAN ø	: 660MM. x(2)

CONDENSER WITH SLIT FINS
DOUBLE DOOR CONTROL PANEL
ALL DIMENSIONS ARE IN INCHES [MM]

DRAWN BY	ALYN	DATE	20-09-2012
DESIGNED BY	JOSEPHW	DATE	20/12/2017
CHECKED BY		DATE	
APPROVED BY		DATE	

REV	DESCRIPTION	DATE	DRN BY
1.3	UPDATE R410A DATA	20.12.17	JOSEPH
1.2	UPDATE TEXT	15.3.17	N'din
1.1	CHANGE FAN TYPE	6.2.17	N'din

DB DUNHAM-BUSH INDUSTRIES SDN. BHD

LOCATION.

QTY.

MODEL 6ACCS 290-P/G

PROJECT STANDARD

TITLE

A/C CONDENSING UNIT

DRAWING NO 82449A-011 REV. 1.3

SCALE : N. T. S SHEET 1 OF 1

TGI/ENG/CD/02 REV. 7 11/15

CERTIFIED DRAWING

COMP	: ZR 190(2) (R407C) / ZP 182(2) (R410A)
COIL SIZE	: ø 3/8x4Rx56THx96FLx12FPI (SLIT)
COND. CIR.	: 4 T/C, (25+26) IN/OUT
SUBCOOL CIR.	: 2 T/C, (5+5) IN/OUT
SUCTION ø	: 1 3/8x(2)
LIQUID ø	: 5/8x(2)
COND. FAN MTR	: 1 HPx(3)
FAN ø	: 660MM. x(3)

CONDENSER WITH SLIT FINS
DOUBLE DOOR CONTROL PANEL
ALL DIMENSIONS ARE IN INCHES [MM]

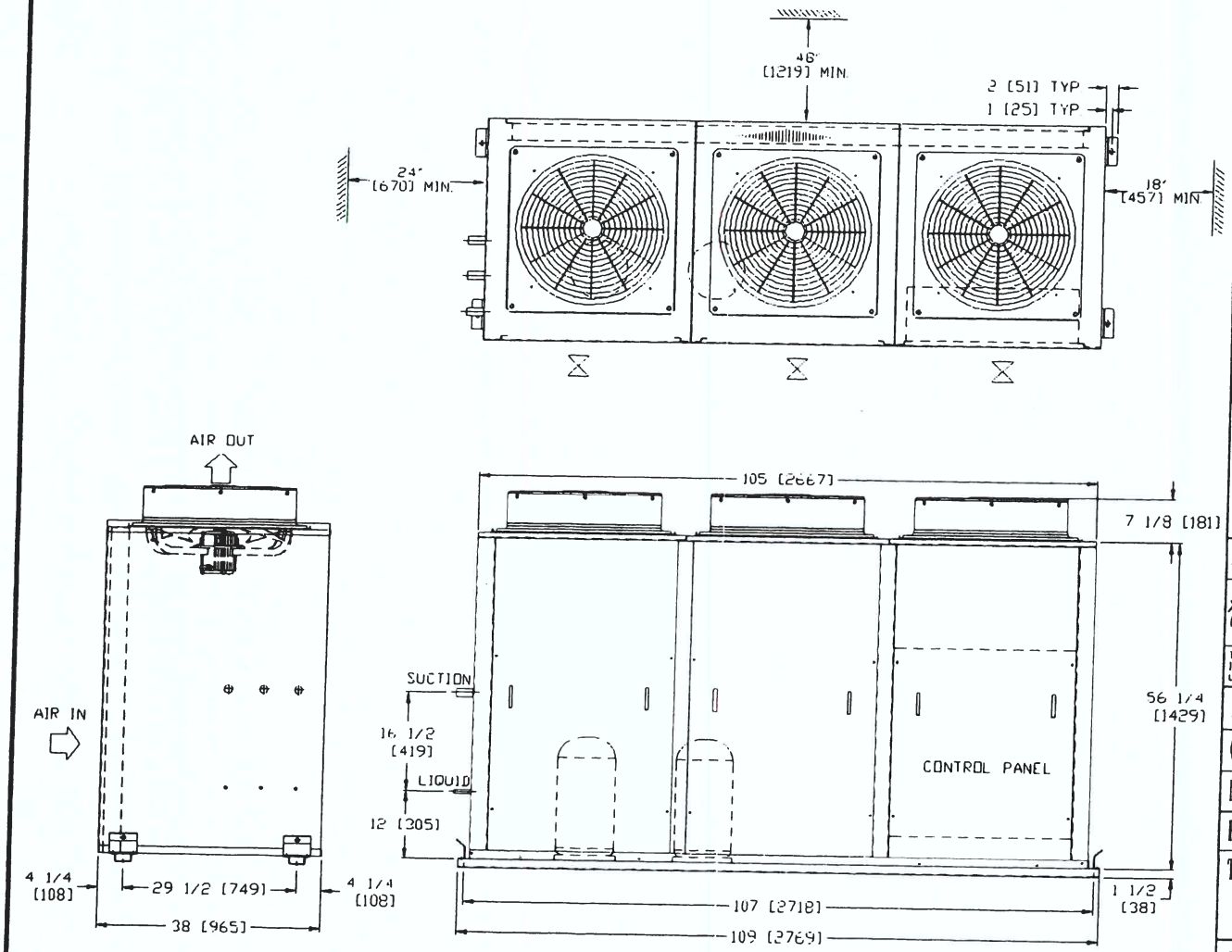

DRAWN BY	ALYN	DATE	21-09-2012
DESIGNED BY	JOSEPHW	DATE	20/12/2017
CHECKED BY		DATE	
APPROVED BY		DATE	

REV	DESCRIPTION	DATE	DRN BY
1.3	UPDATE R410A DATA	20.12.17	JOSEPH
1.2	UPDATE TEXT	15.3.17	N'din
1.1	CHANGE FAN TYPE	6.2.17	N'din

DB DUNHAM-BUSH INDUSTRIES SDN. BHD

LOCATION.

QTY.

MODEL 6ACCS 435-P/G

PROJECT STANDARD

TITLE A/C CONDENSING UNIT

DRAWING NO 82449A-014 REV: 1.3

SCALE : N. T. S SHEET 1 OF 1

DRAWING ACCS570

TGI/ENG/CD/02 REV. 7 11/15

CERTIFIED DRAWING

COMP	: ZR190(1) + ZR160(2) (R407C) / ZP182(1) + ZP154(2) (R410A)
COIL SIZE	: ø 3/8xAR x54THx130FLx10FPI (SLIT)
COND. CIR.	: 4 T/C, 16 IN/OUTx(3)
SUBCOOL CIR.	: 2 T/C, 4 IN/OUTx(3)
SUCTION ø	: 1 3/8x(3)
LIQUID ø	: 5/8x(3)
COND. FAN MTR	: 1 HPx(4)
FAN ø	: 660MM. x(4)

CONDENSER WITH SLIT FINS
DOUBLE DOOR CONTROL PANEL
ALL DIMENSIONS ARE IN INCHES [MM]

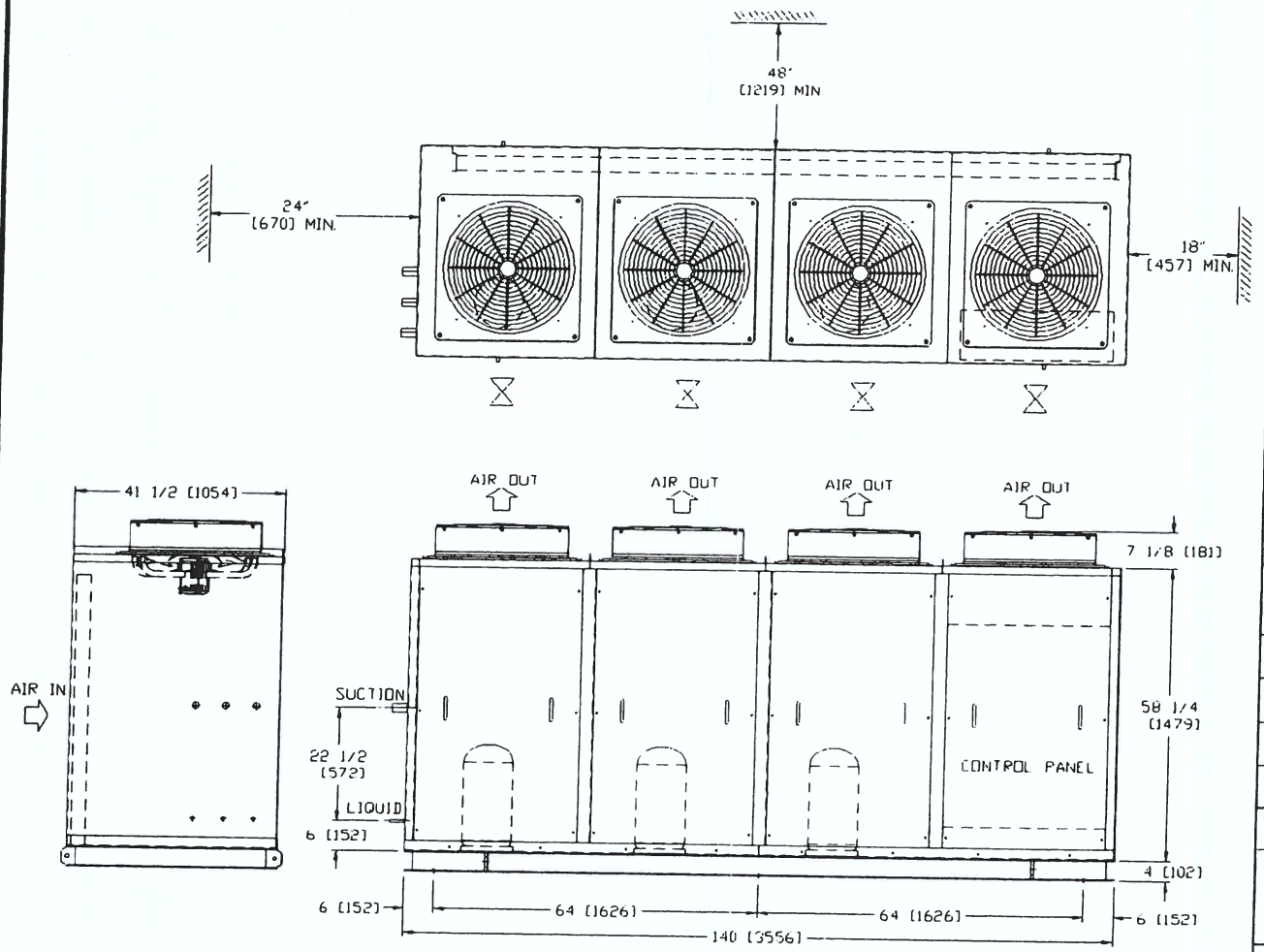

DRAWN BY	ALYN	DATE	21-09-2012
DESIGNED BY	JOSEPHW	DATE	20/12/2017
CHECKED BY		DATE	
APPROVED BY		DATE	

REV	DESCRIPTION	DATE	DRN BY
1.3	UPDATE R410A DATA	20.12.17	JOSEPHW
1.2	UPDATE TEXT	15.3.17	N'din
1.1	CHANGE FAN TYPE	6.2.17	N'din

DB DUNHAM-BUSH INDUSTRIES SDN. BHD

LOCATION.

QTY.

MODEL 6ACCS 570-P/G

PROJECT STANDARD

TITLE A/C CONDENSING UNIT

DRAWING NO 82449A-017 REV: 1.3

SCALE : N. T. S SHEET 1 OF 1

TGI/ENG/CD/02 REV 7 11/15

CERTIFIED DRAWING

COMP.	: ZR 160 TDM(2) (R407C) ZP 154 TDM(2) (R410A)
COIL SIZE	: ø 3/8x4Rx68THx144FLx12FPI (SLIT)
COND. CIR.	: 4 T/C. (28+28) IN/OUT
SUBCOOL CIR.	: 4 T/C. 6 IN/OUTx(2)
SUCTION ø	: 1 5/8x(2)
LIQUID ø	: 7/8x(2)
COND. FAN MTR	: 2 2/3 HPx(3)
FAN ø	: 805MMx(3)

CONDENSER WITH SLIT FINS
DOUBLE DOOR CONTROL PANEL
ALL DIMENSIONS ARE IN INCHES [MM]

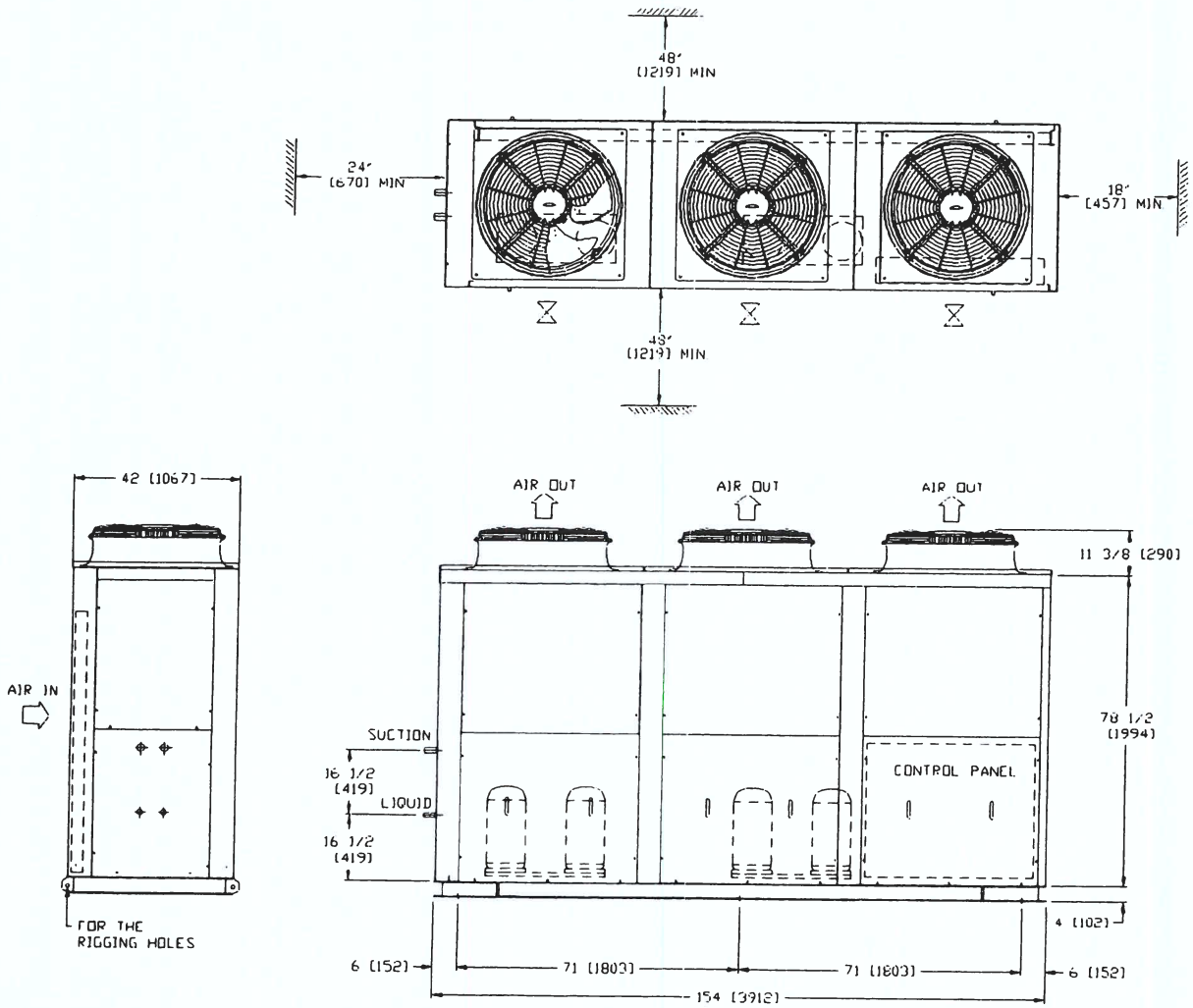

DRAWN BY ALYN	DATE 21-09-2012
DESIGNED BY JOSEPHW	DATE 20/12/2017
CHECKED BY	DATE
APPROVED BY	DATE

REV	DESCRIPTION	DATE	DRN BY
1.2	UPDATE R410A DATA	20.12.17	JOSEPH
1.1	CHANGE CONDENSER FAN TYPE. REVISE DRAWING	13.10.14	CHR

DUNHAM-BUSH INDUSTRIES SDN. BHD

LOCATION.

QTY.

MODEL 6ACCS 700-P/G

PROJECT STANDARD

TITLE

A/C CONDENSING UNIT

DRAWING NO 82449A-019 REV: 1.2

SCALE : N. T. S SHEET 1 OF 1

OPA-PA-22-002-034

Dunham-Bush Industries Sdn Bhd

Dunham-Bush Industries Sdn Bhd was founded in 1987. The Company's line of business includes the manufacturing of refrigeration and heating equipment.

SECTOR	INDUSTRY	SUB-INDUSTRY	INCORPORATED
Industrials	Industrial Products	Electrical Equipment	--

ADDRESS

Lot 5755-6 Kidamai Industrial Park Bukit Angkat Sungai Chua Kajang, 43000 Malaysia

PHONE	WEBSITE	NO. OF EMPLOYEES
60-389249000	--	--

D&B Business Directory

DUNHAM-BUSH INDUSTRIES SDN. BHD.

Private Limited Company Parent

Overview

Doing Business As: DUNHAM-BUSH INDUSTRIES SDN. BHD.

Company Description: DUNHAM-BUSH INDUSTRIES SDN. BHD. is located in KAJANG, Selangor, Malaysia and is part of the Ventilation, Heating, Air-Conditioning, and Commercial Refrigeration Equipment Manufacturing Industry. DUNHAM-BUSH INDUSTRIES SDN. BHD. has 600 total employees across all of its locations. (Employees figure is estimated). There are 23 companies in the DUNHAM-BUSH INDUSTRIES SDN. BHD. corporate family.

Industry: Ventilation, Heating, Air-Conditioning, and Commercial Refrigeration Equipment Manufacturing , Machinery Manufacturing , Manufacturing , Air conditioning equipment, complete , Refrigeration and heating equipment

See other industries within the Manufacturing: Aerospace Product and Parts Manufacturing , Agriculture, Construction, and Mining Machinery Manufacturing , Alumina and Aluminum Production and Processing , Animal Food Manufacturing , Animal Slaughtering and Processing , Apparel Accessories and Other Apparel Manufacturing , Apparel Knitting Mills , Architectural and Structural Metals Manufacturing

Popular Search:

Ventilation, Heating, Air-Conditioning, and Commercial Refrigeration Equipment Manufacturing

Machinery Manufacturing Manufacturing

Address: Lot 5755-6 Kidamai Industrial Park Bukit Angkat Sungai Chua KAJANG, Selangor, 43000 Malaysia

Phone: +60-389249000

Website: www.dunham-bush.com

Employee (all sites): 600

Year Started: 1987

Corporate Family

ALL BUSINESS ENTERPRISES. CORP.

P.O. BOX 8410 TAMUNING, GUAM U.S.A. 96931
TELEPHONE: (671) 646-3346; FAX (671) 646-0589

PROTEST

UOG BID No. B21-17
BID MAJOR REQUIREMENT

1. **BUY AMERICAN ACT; "BAA"; UOG confirmed on question and answer. See attachment.**

2. **Spec Section 2.2.1.1 and Section 2.2.1.4.1 (c); Copper coil; Copper Fin; per UOG Spec, See attachment.**

3. **Spec Section 2.6.2.1 and Section 2.7.2.1 PHENOLIC COATING;**
   The section denotes required factory phenolic coating by immersion dipping the entire coil. Local spray of phenolic coating denotes NOT required or NOT acceptable.

..... NOTHING FOLLOWS .....

QUESTION & ANSWER SHEET NO. 1
November 19, 2021

In response to the written "Questions" and/or 'Request for Clarifications' UOG received as of 10/26/2021 @ 4:49pm from vendor: **Guam Pacific Enterprise, Inc.**

Question 1: Section 5011 of Chapter 5 is not included in the Bid documents. (Policy In Favor of Serviced - Disabled Veteran Owned Business)

Answer: **Please refer to Amendment 2. Item 1.4 #21**

Question 2: Is the Bid All or None Bid?

Answer: **UOG confirms yes, this is an All or None Bid.**

Question 3: Is the installation required?

Answer: **UOG confirms Installation is not required.**

Question 4: Also, will you be using Federal Financial assistance Awards for this Bid therefore it is covered by Buy American Act.

Answer: **UOG confirms Funds are from Higher Education Emergency Relief Fund (HEERF) The Buy American Act is to be followed "to the most extent possible.**

In response to the written "Questions" and/or 'Request for Clarifications' UOG received as of 10/29/2021 @ 5:48pm from vendor: **MJM International Corporation**

Question 1: May I please get more information for the attached? Kindly clarify if it is the ton per unit and column (ton) is the total tonnage.

Answer: **UOG confirms ton is the total tonnage.**

In response to the written "Questions" and/or 'Request for Clarifications' UOG received as of 11/7/2021 @ 12:00pm from vendor: **JWS Refrigeration & A/C Ltd.**

Question 1: It was mentioned that you want to use only one manufacturer for the complete project, but you have Daikin condensers at the Marine Lab. It also is our understanding that many of the indoor units connected to these Daikin condensers also do not operate. These are VRF systems, which means they communicate with each other so you cannot use different manufacturers. Please clarify your intensions on this system.

Answer: **UOG Confirms there is no need for VRF/VRV units as Item Description/Location has been revised to remove Marine Lab requirement. Please refer to Amendment 3, item 1.2.**

Question 6: In Exhibit B page 63 Table 2.0 options No. 1 refers to "Service for maintenance and upkeep". Can you please clarify the meaning of that?

Answer: **UOG confirms although we are only soliciting for condenser units, we would like to understand what the maintenance and upkeep cost for your units. This will give us an idea of the overall cost of your unit.**

Question 7: In Exhibit B page 63 Table 2.0 options No. 3 refers to "Replacement/trade in program". Can you please clarify the meaning of that?

Answer: **UOG confirms although we are only soliciting for condenser units, we would like to understand what the maintenance and upkeep cost for your units. This will give us an idea of the overall cost of your unit.**

Question 8: Does this contract include installation of purchased equipment? At the site visit, it was stated that the contract did not include installation. However, in the bid packet Exhibit B: 2a. it says: "Any additional cost not stated in this bid but are required to complete the delivery and installation must be included in the bidders price" Please clarify.

Answer: **UOG confirms Installation is not included.**

In response to the written "Questions" and/or 'Request for Clarifications' UOG received as of 11/8/2021 @ 11:53am from vendor: **Green Energy Solutions, Inc.**

Question 1: Is the purchase funded by Federal Cares Act funds? If so, do the units need to be BAA compliant?

Answer: **UOG confirms Funds are from Higher Education Emergency Relief Fund (HEERF) The Buy American Act is to be followed "to the most extent possible.**

Question 2: The RFQ Equipment specifications refer to VFR /VRV Units. It does not go into detail on the units being requested.

Answer: **UOG Confirms there is no need for VRF/VRV units as Item Description/Location has been revised to remove Marine Lab requirement. Please refer to Amendment 3, item 1.2.**

Question 3: Of the units requested, the RFQ does not state whether they are Packaged Units, or Ducted Split Units that require Air Handling Units.

Answer: **UOG confirms we are purchasing "Ducted Split Condensers only. No AHU's in this bid.**

Question 4: The RFQ does not state efficiency requirements (EER rating)

Answer: **UOG confirms there are no EER rating.**

Question 5: Are you asking for direct replacements for the units in each of the buildings?

Answer: **UOG confirms, no. In some of the buildings we are consolidating units from smaller units to a bigger unit.**

2.1.4 Safety Devices

Exposed moving parts, parts that produce high operating temperature, parts which may be electrically energized, and parts that may be a hazard to operating personnel must be insulated, fully enclosed, guarded, or fitted with other types of safety devices. Safety devices must be installed so that proper operation of equipment is not impaired. Welding and cutting safety requirements must be in accordance with AWS Z49.1.

2.2 EQUIPMENT

2.2.1 Large-Capacity Split-System Air Conditioners (Greater Than 65,000 Btu/h)

Provide an air-cooled, split system which employs a remote condensing unit, a separate indoor unit, and interconnecting refrigerant piping. Provide the air conditioning type unit conforming to applicable Underwriters Laboratories (UL) standards including UL 1995. Unit must be rated in accordance with ANSI/AHRI 210/240. Provide unit with necessary fans, air filters, and cabinet construction as specified in paragraph UNITARY EQUIPMENT ACCESSORIES. Provide double-width, double inlet, forward curved centrifugal scroll type evaporator or supply fans. Provide the manufacturer's standard for the unit specified and may be centrifugal scroll type condenser or outdoor fans. Enclose fan condenser motors in totally enclosed enclosures and permanently lubricate ball bearings. Air Conditioners must have a minimum energy efficiency ratio (EER) of 12.

2.2.1.1 Air-To-Refrigerant Coil

Provide coils with copper tubes of 3/8 inch minimum diameter with copper fins that are mechanically bonded or soldered to the tubes. Provide casing of galvanized steel. Avoid contact of dissimilar metals. Test coils in accordance with ASHRAE 15 & 34 at the factory and ensure suitability for the working pressure of the installed system. Dehydrate and seal each coil testing and prior to evaluation and charging. Provide each unit with a factory operating charge of refrigerant and oil. Field charge unit shipped with a holding charge with refrigerant and oil. Provide separate expansion devices for each compressor circuit. Condenser coil must have special coating for corrosion resistance. Condenser coil must be copper finned. Coat condenser and evaporator coil with a uniformly applied epoxy electrodeposition, phenolic, or vinyl type coating to all coil surface areas without material bridging between fins. Apply coating at either the coil or coating manufacturer's factory. Coating process must ensure complete coil encapsulation and be capable of withstanding a minimum 1,000 hours exposure to the salt spray test specified in ASTM B117 using a 5 percent sodium chloride solution.

2.2.1.2 Refrigeration Circuit

Refrigerant-containing components must comply with ASHRAE 15 & 34 and be factory tested, cleaned, dehydrated, charged, and sealed. Provide refrigerant charging valves and connections, and pumpdown valves foreach circuit.

2.2.1.3 Unit Controls

Provide unit internally prewired with a 208 volt control circuit powered by an internal transformer.

2.2.1.4 Condensing Unit

Fit each remote condenser coil with a manual isolation valve and an access valve on the coil side. Saturated refrigerant condensing temperature must not exceed 120 degrees F at 95 degrees F ambient. Fan and condensermotors must have totally enclosed enclosures.

2.2.1.4.1 Air-Cooled Condenser

Provide unit rated in accordance with ANSI/AHRI 460 and conform to the requirements of UL 1995. Provide factoryfabricated, tested, packaged, and self-contained unit. Unit must be complete with casing, propeller or centrifugal type fans, heat rejection coils, connecting piping and wiring, and all necessary appurtenances.

a. Provide interconnecting refrigeration piping, electrical power, and control wiring between thecondensing unit and the indoor unit as required and as indicated. Provide electrical and refrigeration piping terminal connections between condensing unit and evaporator units.

b. Low ambient control for multi-circuited units serving more than one evaporator coil must provide independent condenser pressure controls for each refrigerant circuit. Set controls to produce a minimum of 95 degrees F saturated refrigerant condensing temperature. Provide unitwith a liquid subcooling circuit that ensures proper liquid refrigerant flow to the expansion device over the specified application range of the condenser. Unit must be provided with manufacturer's standard liquid subcooling. Liquid seal the subcooling circuit.

c. Coils must have copper tubes of 3/8 inch minimum diameter with copper fins that are mechanically bonded or soldered to the tubes. Protect coil in accordance with paragraph COIL CORROSION PROTECTION. Casing must be galvanized steel or aluminum. Avoid contact of dissimilar metals. Test coils in accordance with ASHRAE 15 & 34 at the factory and ensure suitability for the working pressure of the installed system. Dehydrate and seal each coil after testing and prior to evaluation and charging. Provide each unit with a factory operating charge ofrefrigerant and oil or a holding charge. Field charge unit shipped with a holding charge. Provide separate expansion devices for each compressor circuit.

d. Provide a complete control system with required accessories for regulating condenser pressure by fan cycling, solid-state variable fan speed, modulating condenser coil or fan dampers, floodingthe condenser, or a combination of the above. Construct unit mounted control panels or enclosures in accordance with applicable requirements of NFPA 70 and house in NEMA ICS 6, Class 1 or 3A enclosures. Controls must include overload protective devices, interface with local and remote components, and intercomponent wiring to terminal block points.

2.2.1.4.2 Compressors

2.6.2 Equipment and Components Factory Coating

Unless otherwise specified, equipment and component items, when fabricated from ferrous metal, must be factory finished with the manufacturer's standard finish, except that items located outside of buildings must haveweather resistant finishes that will withstand 500 hours exposure to the salt spray test specified in ASTM B117 using a 5 percent sodium chloride solution. Immediately after completion of the test, the specimen must show no signs of blistering, wrinkling, cracking, or loss of adhesion and no sign of rust creepage beyond 1/8 inch on either side of the scratch mark. Cut edges of galvanized surfaces where hot-dip galvanized sheet steel is used must be coated with a zinc-rich coating conforming to ASTM D520, Type I.
Where stipulated in equipment specifications of this section, coat finned tube coils of the affected equipment as specified below. Apply coating at the premises of a company specializing in such work. Degrease and prepare for coating in accordance with the coating applicator's procedures for the type of metals involved. Completed coatingmust show no evidence of softening, blistering, cracking, crazing, flaking, loss of adhesion, or "bridging" between the fins.

2.6.2.1 Phenolic Coating

Provide a resin base thermosetting phenolic coating. Apply coating by immersion dipping of the entire coil. Providea minimum of two coats. Bake or heat dry coils following immersions. After final immersion and prior to final baking, spray entire coil with particular emphasis given to building up coating on sheared edges. Total dry film thickness must be 2.5 to 3.0 mils.

2.6.2.2 Chemical Conversion Coating with Polyelastomer Finish Coat

Dip coils in a chemical conversion solution to molecularly deposit a corrosion resistant coating by electrolysis action. Cure conversion coating at a temperature of 110 to 140 degrees F for a minimum of 3 hours. Coat coil surfaces with a complex polymer primer with a dry film thickness of 1 mil. Cure primer coat for a minimum of 1hour. Using dip tank method, provide three coats of a complex polyelastomer finish coat. After each of the firsttwo finish coats, cure the coils for 1 hour. Following the third coat, spray a fog coat of an inert sealer on the coilsurfaces. Total dry film thickness must be 2.5 to 3.0 mils. Cure finish coat for a minimum of 3 hours. Coating materials must have 300 percent flexibility, operate in temperatures of minus 50 to plus 220 degrees F, and protect against atmospheres of a pH range of 1 to 14.

2.6.2.3 Vinyl Coating

Apply coating using an airless fog nozzle. For each coat, make at least two passes with the nozzle. Materials to be applied are as follows:

a. Total dry film thickness, 6.5 mils maximum

b. Vinyl Primer, 24 percent solids by volume: One coat 2 mils thick

Provide gaskets conforming to ASTM F104 - classification for compressed sheet with nitrile binder and acrylic fibersfor maximum 700 degrees F service.

2.6.4 Bolts and Nuts

Bolts and nuts must be in accordance with ASTM A307. The bolt head must be marked to identify the manufacturer and the standard with which the bolt complies in accordance with ASTM A307.

2.7 FINISHES

2.7.1 Coil Corrosion Protection

Provide coil with a uniformly applied epoxy electrodeposition, phenolic, or vinyl type coating to all coil surfaceareas without material bridging between fins. Submit product data on the type coating selected, the coating thickness, the application process used, the estimated heat transfer loss of the coil, and verification of conformance with the salt spray test requirement. Coating must be applied at either the coil or coating manufacturer's factory. Coating process must ensure complete coil encapsulation. Coating must be capable ofwithstanding a minimum 1,000 hours exposure to the salt spray test specified in ASTM B117 using a 5 percentsodium chloride solution.

2.7.2 Equipment and Components Factory Coating

Unless otherwise specified, equipment and component items, when fabricated from ferrous metal, must be factory finished with the manufacturer's standard finish, except that items located outside of buildings must haveweather resistant finishes that will withstand 500 hours exposure to the salt spray test specified in ASTM B117. Immediately after completion of the test, the specimen must show no signs of blistering, wrinkling, cracking, or loss of adhesion and no sign of rust creepage beyond 1/8 inch on either side of the scratch mark. Cut edges of galvanized surfaces where hot-dip galvanized sheet steel is used must be coated with a zinc-rich coating conforming to ASTM D520, Type I.

Where stipulated in equipment specifications of this section, coat finned tube coils of the affected equipment as specified below. Apply coating at the premises of a company specializing in such work. Degrease and prepare for coating in accordance with the coating applicator's procedures for the type of metals involved. Completed coating must show no evidence of softening, blistering, cracking, crazing, flaking, loss of adhesion, or "bridging" between the fins.

2.7.2.1 Phenolic Coating

Provide a resin base thermosetting phenolic coating. Apply coating by immersion dipping of the entire coil. Provide a minimum of two coats. Bake or heat dry coils following immersions. After final immersion and prior to final baking, spray entire coil with particular emphasis given to building up coating on sheared edges. Total dry film thickness must be 2.5 to 3.0 mils.

2.7.2.2 Chemical Conversion Coating with Polyelastomer Finish Coat

Dip coils in a chemical conversion solution to molecularly deposit a corrosion resistant coating by electrolysis action. Cure conversion coating at a temperature of 110 to 140 degrees F for a

TAB 2

EXHIBIT B

UOG BID NO.B21-17

PURCHASING OF HVAC EQUIPMENT OF THE UNIVERSITY OF GUAM

Scope of Work

1. Scope of the Work
   This bid is to select and award a contract for the purchasing of multiple Air Conditioning units for the University of Guam.

2. Bid Submittals

   a) Bid prices shall be submitted on Bid Price Form. All prices shall include shipping, delivery,and manufacturer's warranty. Any additional cost not stated in this bid but are required to complete the delivery must be included in the bidder's price.

   b) Bidder shall submit an electronic copy to the Share folder that UOG procurement office provides.
   Contractor is required to submit prices for Table 1.0.
   Bid award to be based on the required items in Table 1.0 and to be based on price, compliance to the specification, services, delivery and any requirements in the BID package, BID NO. B21-17.

Table 1.0 Bid Price Form

No.	ITEM DESCRIPTION					BID Price
1	LOCATION	UNIT	TONS	VOLTAGE	TVX	
	RFK BUILDING SECOND FLOOR	1	50	208 / 230	2 EA. - 25	120,002.50
	RFK BUILDING FIRST FLOOR	1	40	208 / 230	2 EA. -	107,574.60
	20RFK BUILDING FIRST FLOOR MAIN ENTRANCE	1	15	208 / 230	2 EA. -	67,372.50
	7.5RFK BUILDING FIRST FLOOR AV ROOM	1	15	208 / 230	2 EA. -	67,372.50
	7.5RFK BUILDING FIRST FLOOR OFFICES	1	20	208 / 230	2 EA. - 10	80,461.60
	PIP (GLE) SECOND FLOOR	1	20	208 / 230	2 EA. -	80,461.60
	10SCIENCE BUILDING FIRST FLOOR	1	40	208 / 230	2 EA. -	107,574.60
	20SCIENCE BUILDING SECOND FLOOR	1	40	208 / 230	2 EA. -	107,574.60
	20SCIENCE BUILDING THIRD FLOOR	1	20	208 / 230	2 EA. -	80,461.60
	10EGLISH COMMUNICATION BUILDING CLASSROO	1	30	208 / 230	2 EA. -	98,359.60
	15COMPUTER CENTER OIT					

	BUILDING FIRST FLOOR	1	50	277 / 460	2 EA. - 25	120,002.50
	LECTURE HALL AUDITORIUM	1	20	277 / 460	2 EA. - 10	80,461.60
	HSS BUILDING	2	50	277 / 460	2 EA. – 25	240,005.00
	HSS BUILDING	1	30	277 / 460	2 EA. – 15	98,359.60
Grand Total						$1,456,044.40
Delivery: 18–20 weeks after receipt of purchase order						

18 TO 20 WEEKS FACTORY ;EAD TIME PLUS 5 WEEKS SHIPPING.
ALL UNITS MANUFACTURED WITH COPPER TUBES, COPPER FINS PLUS FACTORY PHENOLIC COATING FOR CORROSION.

NELIA F. BANGAYAN – DEC. 6, 2021

SIGNATURE OF BIDDER DATE

OPTIONS

For Table 2.0 Options, the bidder's price will not be included as part of the total price evaluation for this bid award. UOG reserves the right to exercise any or part of the options requested. Insert any additional options recommended.

Table 2.0 Options

No.	Item Description	Price
1	Services for Maintenance and upkeep. Quarterly preventive Maintenace. 1,200 per unit discounted to 850.00 per unit X 15 units = 12,750 x 4 quarters equals;	$51,000.00
2	Services for disposal. heavy equiotment rental 750.00 per unit X 15 = $ 11,250.00	
3	Replacement/trade in program To be discussed upon award.	

OTHER NOTES:

1. These specifications have been written to describe minimum equipment and performance requirements to be supplied by the equipment manufacturer bidding. Reasonable tests may be conducted upon delivery before acceptance.

2. The University reserves the right to accept and/or reject any and all bids, to waive any defects, irregularities, or specification discrepancies and to award the bid deemed to be in the best interest of the University.

NOTE: Name and title of author of specifications:

University of Guam

Glenn Leon Guerrero, Director, Facilities Management & Services, Email: glennlg@triton.uog.edu

Emily Gumataotao, Supply Management Administrator, Email: eggumataotao@triton.uog.edu

DO NOT CASH THIS CHECK UNLESS YOU CAN SEE THE WATERMARK. HOLD UP TO LIGHT TO VIEW. READ WARNING MESSAGE BELOW.

Bank of Guam

Member FDIC

P.O. BOX BW · HAGÅTÑA, GUAM 96932

101-511
1214

NO. 1020651

DATE: DECEMBER 03, 2021

NOT VALID AFTER 90 DAYS FROM DATE OF ISSUE

PAY TO THE ORDER OF UNIVERSITY OF GUAM

$ 218,410.00***

******TWO HUNDRED EIGHTEEN THOUSAND FOUR HUNDRED TEN AND NO/100******

DOLLA

MEMO: UOG BID NO. B21-17

TWO SIGNATURES REQUIRED OVER $100,000

DAMIAN C. [illegible]
FAMILIA AMBASSADOR III

ARLENE C. [illegible]
FAMILIA AMBASSADOR I

CASHIER'S CHECK

WARNING: DO NOT CASH THIS CHECK UNLESS YOU CAN SEE THE WATERMARK. TO VERIFY WATERMARK HOLD UP TO LIGHT TO VIEW. RUB GRAY SIGNATURE AREA TO SEE COLOR CHANGE. CHECK BACKGROUND IS IN GREEN COLOR.

⑈1020651⑈ ⑆121405115⑆ 3110140⑈ 81

Received By Kaimana Terkaje
DEC. 3, 2021

DF
1
AN

ADMINISTRATION & FINANCE
Consolidated Procurement Office

INVITATION FOR BID (IFB)
UOG BID No. B21-17

The University of Guam is soliciting sealed bids for:

PURCHASING OF HVAC EQUIPMENT

l Information may be obtained from: UOG Procurement Office
2925
-3010
n.uog.edu
tion Building, Mangilao, Guam

curement to obtain a copy of the Bid Package. Once your request is received, you will cess and ability to download the PDF file.

00 is ONLY required to submit a bid offer due before bid deadline. Payment may be t card at the UOG Business Office, Cashier Services located at the UOG Administration 4 pm. Pay by phone is available by contacting 735-2923/45/46. Please reference Bid king payment. Send proof of receipt to uog.bids@triton.uog.edu.

id Packages is on **Monday, November 22, 2021** on or before 2:00 P.M. via electronic submission to electronic Bid Share folder provided by UOG Procurement Office. Bid Opening will take place at 3:00 pm through Zoom link provided to all bidders.

Note: Prospective bidders/respondents will automatically be registered with information provided on form when requesting for bid documents. Contact information should be accurate to ensure you receive any notices regarding any changes or updates to the IFB/RFP. UOG will not be liable for failure to provide notice to any party who inputs inaccurate contact information.

/s/Thomas W. Krise, Ph.D.
President

University of Guam is an Equal Opportunity Employer and Provider.
This Advertisement is paid for by University of Guam Funds

OPA-PA-22-002-049

2022

CONTRACTOR'S LICENSE

LOU LEON GUERRERO
Governor of Guam

JOSH TENORIO
Lt. Governor of Guam

Pursuant to the provisions of Chapter VII Title XI of the Government of Guam and the Rules and Regulations of the Contractors License Board, the Executive Director of Contractors hereby issues this license to:

All Business Enterprises Corporation

To engage in the business or act in the capacity of a contractor in the following classifications

A, B, C3, C4,C11,C13,C13A,C16,C17,C18,C19,C20,C33,C37,C40, C42, C44, C51, C55, C56 & C68 (Epoxy, Generator Maintenance)

This license is the property of the Executive Director of Contractors, not transferable, and shall be returned to the Executive Director upon demand when suspended, revoked, or invalidated for any reason. It becomes void if not renewed on or before the expiration date.

Signature of RME
RME # 7733

Signature of LICENSEE
License # 8112

GRT # 200200441
Issued: June 29, 2021

Certificate # C-0621-0929
Expires: June 30, 2022

JAMES M. CASALLO
CLB BOARD CHAIRMAN

CECIL "BUDDY" L. ORSINI
EXECUTIVE DIRECTOR

OPA-PA-22-002-050

UNIVERSITY OF GUAM
UNIBETSEDÅT GUÅHAN

ADMINISTRATION & FINANCE
Consolidated Procurement Office

AMENDMENT 1

Invitation for Bid (IFB)
UOG IFB No. B21-17

Date Issued: October 29, 2021

PURCHASING OF HVAC EQUIPMENT

This is to notify all prospective offerors of the following amendment:

1.1 **PRE-BID Conference and Site visit is scheduled for Wednesday, November 3, 2021 at 10:00am. Meet-up will be at Facilities Maintenance Services, 1st Floor Bay. Please contact 735-2377 for directions.**

All other terms and conditions remain the same.

Emily G. Gumataotao
Supply Management Administrator

Please acknowledge receipt and email: uog.bids@triton.uog.edu:

Name of company: ALL BUSINESS ENTERPRISES CORPORATION

NELIA F. BANSAYAN NOV. 30, 2021
Print Name/Signature/date

T: +1 671.735.2925 F: +1 671.735.3010 W: www.uog.edu E: uog.bids@triton.uog.edu
Mailing Address: 303 University Drive UOG Station Mangilao, Guam 96913

UNIVERSITY OF GUAM
UNIBETSEDÅT GUÅHAN

ADMINISTRATION & FINANCE
Consolidated Procurement Office

AMENDMENT 2

Invitation for Bid (IFB)
UOG IFB No. B21-17

Date Issued: October 29, 2021

PURCHASING HVAC EQUIPMENT

This is to notify all prospective offerors of the following amendment set forth below:

1.1 **REPLACE** **"Cover Page"** with corrected form as set forth in the attached.
1.2 **ADD:** *after* Cover Page, p.2 **"Bidders Registry"** with corrected form as set forth in the attached.
1.3 **REPLACE** **"Table of Contents"** with corrected form as set forth in the attached.
1.4 **REPLACE** **"Instructions to Bidders"** with corrected forms as set forth in the attached.
1.5 **ADD:** *after* ATTACHMENT I, "Register of Wage Determinations Under The Service Contract Act"
1.6 **REPLACE** Exhibit B "Bid Price Form" with corrected forms as set forth in the attached.

All other terms and conditions remain the same.

Emily G. Gumataotao
Supply Management Administrator

Please acknowledge receipt and email: **uog.bids@triton.uog.edu:**

Name of company: ALL BUSINESS ENTERPRISES CORPORATION

NELIA F. BANGAYAN NOV. 30, 2021
Print Name/Signature/date

T: +1 671.735.2925 F: +1 671.735-3010 W: www.uog.edu E: uog.bids@triton.uog.edu
Mailing Address: 303 University Drive UOG Station Mangilao, Guam 96913

UNIVERSITY OF GUAM
UNIBETSEDÅT GUÅHAN

ADMINISTRATION & FINANCE
Consolidated Procurement Office

INVITATION FOR BID (IFB)
UOG BID NO. B21-17

The University of Guam is soliciting sealed bids for the PURCHASING OF HVAC EQUIPMENT For The University of Guam

Copies of the Bid Package and Instructions and Information may be obtained from:

OFFICE:	UOG Procurement Office
TELEPHONE:	(671) 735-2925
FAX NO.:	(671) 735-3010
LOCATION:	UOG Administration Building (ANNEX BUILDING) Mangilao, Guam
E-MAIL:	uog.bids@triton.uog.edu

A non-refundable fee of $25.00 is required to obtain a hard copy of the bid package. Payment may be made via cash, check or credit card at the UOG Business Office, Cashier Services located at the UOG Administration Building Mon-Fri from 8 am - 4 pm. Pay by phone is available from 8 am - 4 pm. You may schedule an appointment with our cashier services at 735-2923/45/46, please reference Bid number and title when making payment. Send proof of receipt to the Procurement Office.

In accordance with 5 G.C.A. §5220(a), a digital copy of this solicitation shall be posted on UOG's website at uog.bids@triton.uog.edu. No fees shall be assessed to potential bidders or other parties for accessing or downloading a copy of this solicitation from UOG's website. Potential bidders who access or download a copy of this solicitation from UOG's website must register their contact information with UOG to ensure that they receive any notices regarding any changes or updates to this solicitation. In accordance with 5 G.C.A. §5220(b), UOG shall not be liable for failure to provide notice to any party who accesses or downloads a copy of this solicitation from UOG's website and who fails to register their contact information with UOG as required herein. Please have subject line reference as indicated the *UOG Bid number, Bid Title, and your Company or Requestor's Name to register for UOG's Bid Distribution Registry.*

Deadline for Submission of Bid Packages is on Monday, November 22, 2021 on or before 2:00 P.M. via electronic submission to electronic Bid Share folder provided by UOG Procurement Office.

/s/ Thomas W. Krise, Ph.D.
President

University of Guam is an equal opportunity employer and provider.
This Advertisement is paid for by University of Guam Funds.

AUTHORIZED FOR ANNOUNCEMENT

Thomas W. Krise, Ph.D. President

UNIVERSITY OF GUAM
UNIBETSEDÅT GUÅHAN

ADMINISTRATION & FINANCE
Consolidated Procurement Office

UOG BIDDERS DISTRIBUTION REGISTRY FORM FOR UOG BID NO. B21-17

INFORMATION ON INTERESTED BIDDER FOR BID REGISTRY ENTRY MUST BE RECEIVED BY UOG'S PROCUREMENT OFFICE PRIOR TO RECEIVING ANY DISTRIBUTED COPY SET OF THIS IFB (WITH OR WITHOUT THE BID FEE)

NOTICE:

ALL DISTRIBUTIONS OF THIS BID PACKET MUST BE RECORDED IN THE BID'S REGISTRY (LOG) AT UOG'S CONSOLIDATED PROCUREMENT OFFICE.

THE BID REGISTRY ALSO PROVIDES THE NECESSARY CONTACT INFORMATION NEEDED TO DISTRIBUTE FUTURE AMENDMENTS, ADDENDUMS, AND CLARIFICATIONS FOR THIS BID PACKET.

UOG PAYMENT RECEIPT NO. _____ DATE: 11 / 30 /21 TIME: _____

PAYMENT METHOD: [ ] CASH [ ] CHECK NO. _____ [ ] CREDIT CARD _____

NAME OF COMPANY: ALL BUSINESS ENTERPRISES CORPORATION

PHYSICAL ADDRESS: 153 B HARMON INDUSRIAL PARK, TAMUNING, GUAM 96913

MAILING ADDRESS: P.O.BOX 9788, TAMUNING, GUAM 96931

CONTACT PERSON & TITLE: NELIA F. BANGAYAN , PRESIDENT

CONTACT NUMBERS: TELEPHONE 671-646-4435 FAX 671-646-0589 CELLULAR 671-483-8310

E-MAIL ADDRESS: nbangayan@jbmoderntech.com

OTHER CONTACT INFORMATION OR HELPFUL INSTRUCTIONS FOR UOG WHEN FORWARDING FUTURE UPDATES:

UNIVERSITY OF GUAM - CONSOLIDATED PROCUREMENT OFFICE
UOG Station, Mangilao, Guam 96923 Tel. (671) 735.2925 Fax. (671) 735.3010

UNIVERSITY OF GUAM
UNIBETSEDÅT GUÅHAN

ADMINISTRATION & FINANCE
Consolidated Procurement Office

TABLE OF CONTENTS

UNIVERSITY OF GUAM
UNIBETSEDÅT GUÅHAN

ADMINISTRATION & FINANCE
Consolidated Procurement Office

UNIVERSITY OF GUAM
INVITATION FOR BID UOG BID NO. B21-17
PURCHASING OF HVAC EQUIPMENT FOR THE UNIVERSITY OF GUAM

DATE ISSUED: October 22, 2021

UOG SECTION: FACILITIES MANAGEMENT & SERVICES (FMS), ADMINISTRATION & FINANCE

ISSUED BY: UOG CONSOLIDATED PROCUREMENT OFFICE
TELEPHONE NO.: (671) 735-2925 FAX NO.: (671) 735-3010
E-MAIL: uog.bids@triton.uog.edu

INSTRUCTIONS TO BIDDERS

1. RECEIPT AND OPENING OF BIDS: Sealed bids for UOG **B21-17** PURCHASING OF HVAC EQUIPMENT FOR THE UNIVERSITY OF GUAM (UOG) must be received by the Procurement Office nolater than:

   TIME: 2:00 P.M. DATE: Monday, November, 22, 2021

   Bids submitted after the time and date specified above shall be rejected. Bid opening will be conducted electronically via Zoom Link at 4:00 pm; link will be provided through email to all registered offerors.

   Attention is called to the fact that bidders not only offer to assume the obligations and liabilities imposed upon the contractor in the form of a contract, but are expressly made certain of the representations and warrants made herein. No effort is made to emphasize any particular provision of the contract, but biddersmust familiarize themselves with every provision and its effect. This Bid is subject to **General Terms and Conditions of the Invitation for Sealed Bids (Attachment A) and the Special General Provisions (Attachment B).**

   In consideration of the expense of the University of Guam of opening, tabulating, and evaluating this and other bids, and other considerations, the undersigned agrees that this bid shall remain firm and irrevocablewithin sixty (60) calendar days from the date of opening to supply any or all of items for which prices are quoted.

2. BIDDER QUALIFICATIONS (Attachment C): The University of Guam may require bidders to presentsatisfactory evidence that they have sufficient experience and that they are fully prepared, thus it is required that the bidder completely fill out the Bidder's Qualifications Form.

3. NON-COLLUSION AFFIDAVIT (Attachment D): Each person submitting a bid for any portion of the work covered by the bidding documents shall execute an affidavit, in the form provided with the Bid to theeffect that he has not colluded with any other person, firm or corporation in regard to any bid submitted. Such affidavit shall be attached to the proposal.

4. MAJOR SHAREHOLDERS AFFIDAVIT (Attachment E): As a condition to submitting of bids or proposals, any partnership, sole proprietorship or corporation doing business with the University of Guam shall submit an affidavit that lists the name and address of any person who has held more than ten percent (10) of outstanding shares in said partnership, sole proprietorship or corporation at any time during the twelve (12) month period immediately preceding submission of a proposal. The affidavit shall contain thenumber of shares or the percentage of all assets of such partnership, sole proprietorship or corporation which have been held by each person during the twelve (12) month period. In addition, the affidavit shall contain the name and address of any person who has received or is entitled to receive a commission, gratuity or other compensation for the procuring or assisting in obtaining business related to the bid or proposal for the Offeror and shall contain the amounts of any shall commission, gratuity or other compensation. The affidavit shall be open and available for inspection and copying.

5. AFFIDAVIT RE GRATUITIES, KICKBACKS AND FAVORS (Attachment G): The bidder, offeror or contractor represents that it will not violate the prohibition against gratuities and kickbacks and favors set forth (Gratuities and Kickbacks) in 5 GCA, Chapter 5, Article 11, Ethics in Public Contracting and Section 11.7 (Gratuities and Kickbacks and Favors) of the UOG Procurement Manual.

6. AFFIDAVIT RE ETHICAL STANDARDS (Attachment H): The bidder, offeror, or contractor representsthat it has not knowingly influenced and promises that it will not knowingly influence a government employee to breach any of the ethical standards set forth in 5 GCA, Chapter 5, Article 11, and in Chapter 11 (Ethics in Public Contracting) of the UOG Procurement Manual.

7. COVENANT AGAINST CONTINGENT FEES (Attachment I): The prospective contractor represents aspart of such contractor's bid or proposal that such contractor has/has not (Circle applicable word or words) retained any person or agency on a percentage, commission, or other contingent arrangement, except for retention of bona fide employees or bona fide established commercial selling agencies for the purpose of securing business.

8. DECLARATION RE COMPLIANCE WITH U.S. DEPARTMENT OF LABOR WAGE DETERMINATION (Attachment J): In accordance with 5 GCA §§ 5801 and 5802, as may be applicable, each bidder certifies that any of its employees whose purpose, in whole or in part, is the direct delivery of service contracted by the University shall be paid in accordance with the Wage Determination for Guam and the Northern Mariana Islands issued and promulgated by the U.S. Department of Labor for such labor as is employed in the direct delivery of contract deliverables to the University, including health and other similar benefits. Theupdated wage rate with the most current revision shall be included in the bid submission.

9. RIGHT TO ACCEPT AND REJECT BIDS: The President of the University of Guam reserves the unqualified right, in his sole and absolute discretion, to reject any and all bids, or to accept that bid or combination of bids, if any, which in his sole and absolute judgment will under all circumstances best servethe interests of the University of Guam. In the event that the successful bidder fails to execute the contract upon his part or to furnish a satisfactory performance and payment bond, the University, after declaring thesecurity deposit of such bidder forfeited, reserves the option to accept the bid of any other bidder within ten (10) days from such default, in which case such acceptance shall have the same effect as to such bidderas though he was the originally successful bidder.

10. MODIFICATIONS PRIOR TO DATE SET FOR OPENING BIDS: The University reserves the right to revise or amend the specifications prior to the date set for opening bids. Such revisions and amendments, ifany, will be announced by an amendment or amendments to this Invitation for Bids and shall be identified as such. It is required that the bidders acknowledge in writing receipt of all amendments issued and such acknowledgment must be included in the bid. The

amendment shall refer to the portions of the Invitation forBids it amends. Amendments shall be sent to all prospective Bidders known to have received an Invitation for Bids. Amendments shall be distributed within a reasonable time to allow prospective Bidders to considerthe amendment in preparing their Bids. If the time and date set for receipt of bids will not permit such preparation, such time shall be increased to the extent possible in the amendment or, if necessary, by email or telephone and confirmed in the amendment.

11. CANCELLATION OF SOLICITATION: Prior to the date set for opening bids, a solicitation may be cancelled in whole or in part when the President or his designee determines in writing that the cancellation of the solicitation is in the University's best interest, in accordance with the University's Procurement Rulesand Regulations.

12. METHOD OF AWARD: Bid shall be awarded to the [x] lowest, [ ] highest, responsible and responsive bidder whose bid meets the requirements and criteria set forth in the Invitation for Bids. A responsible bidder is one who has the capability in all respects to perform fully the contract requirements, and the integrity and reliability which will assure good faith performance. A responsive bidder is one who has submitted a bid which conforms in all material respects to the Invitation for Bids. The University reserves the right to waive any minor information of irregularity in Bids received. The President shall have the authority to award or reject Bids, in whole or in part for any one or more items if he determines it is in the public interest.

Award issued to the [x] lowest, [ ] highest, responsible and responsive bidder within the specified time foracceptance as indicated in the Bid, results in a binding contract without further action by either party provided the successful bidder executes a formal contract with the University. In case of any error in the extension of prices, unit price will govern. It is the policy of the Government of Guam to award Bids to qualified local vendors.

13. SUBMISSION OF BIDS:

a. Bids and modifications thereof shall be submitted through electronic submission to the Share folder that UOG procurement office provides and addressed to the office specified in the Solicitation. The electronic file submission will show the hour and date of submission as specifiedin the Solicitation for receipt. The file should identify the Solicitation number, and the name of the bidder.

b. Bids may be modified or withdrawn by written or telegraphic notice, provided such notice is received prior to the hour and date specified for receipt (see paragraph 9 of these instructions).

c. Samples of items, when required, must be submitted within the time specified, unless otherwise specified by the University, at no expense to the University. If not destroyed by testing, sampleswill be returned at bidder's request and expense, unless otherwise specified by the Solicitation.

d. Samples or descriptive literature should not be submitted unless it is required on this Solicitation. Regardless of any attempt by a bidder to condition the bid, unsolicited samples or descriptive literature will not be examined or tested at the bidder's risk, and will not be deemed to vary any ofthe provisions of this Solicitation.

14. FAILURE TO SUBMIT BID: If no bid is to be submitted, do not return the Solicitation unless otherwise specified. A letter or postcard shall be sent to the issuing office advising whether future Solicitations for the type of supplies or services covered by this Solicitation is desired.

15. PRE-BID CONFERENCES. Pre-Bid conferences will be permitted any time prior to the date establishedherein for submission of bid. The conferences will be conducted only to explain the procurement requirements for this Request for Proposal. The Authority will notify all Bidders of any substantive clarification provided in response to any inquiry. The Authority will extend the due date if such information significantly amends the solicitation or makes compliance with the original proposed due date impractical.

16. BID PACKET. The prospective bidder is required to read each and every page of the Bid Packet and bythe act of submitting a proposal shall be deemed to have accepted all conditions contained therein. In no case will failure to inspect constitute grounds for claim or for the withdrawal of a bid after opening. Bid submission shall be sent electronically. Erasures or other changes in a bid must be explained or noted over the signature of the offeror. Bid submission containing any conditions, omissions, unexplained erasure or alterations or items not called for in the Bid packet, or irregularities of any kind may be rejected by the University as being incomplete.

17. BID PACKET FORM. A non-refundable fee of **$25.00 (U.S.)** shall be charged for each hard copy or CD ROM bid packet. All payments shall be made by cash, certified check or money order to the University of Guam. Cashier services are located at the UOG Administration Building Mon-Fri from 8am-4pm by appointment only. Payby phone is also available from 8am-4pm at 735-2923/45/46.

18. NOTICE OF AWARD. UOG will notify all bidders the status of the Bid and Notice of Award. Written notice of award will be public information and made a part of the contract file.

19. LOCAL PROCUREMENT PREFERENCE: "All procurement of supplies and services shall be made from among businesses licensed to do business on Guam in accordance with Guam Code Annotated Title 5 Chapter 5 Section 5008 and Section 3.9.14.5, UOG Procurement Regulation."

20. BIODEGRADABLE, REUSEABLE, RECYCLABLE MATERIALS: Section 1.5, UOG Procurement Regulations. UOG's President or his designee, whenever possible, shall procure products that are biodegradable, reusable, recyclable, or made of recycled material, or any of these in any combination. The cost (prior to any adjustments for local vendors) of appropriate biodegradable, reusable, recyclable, or recycled products may be as much as ten percent (10%) greater than the cost of the non-biodegradable, non-reusable, non-recyclable, or non- recycled products they are replacing.

21. SERVICE-DISABLED VETERAN PREFERENCE: UOG will award the contract for this solicitation to bidders that are business concerns that are at least fifty-one-percent (51%) owned by a service-disabled veteran(s) who served in the active U.S. military: (1) Who was discharged or released under honorable conditions and whose disability is service-connected as demonstrated by a DD Form 214, and certified by an award letter from the U.S. Department of Veterans Affairs; (2) That submitted the DD Form 214 and Disability award letter from the U.S. Department of Veterans Affairs with their bid submitted in response to this solicitation; (3) The service-disabled veteran(s) owner of the business concern has filed individual tax returns on Guam for a period of at least three (3) consecutive years; (4) The business concern is licensed to do business on Guam; (5) The business concern maintains its headquarters on Guam; (6) the supply or service offered by the business concern is available within the period required by UOG; and (7) The price for the supply or service does not exceed one-hundred-five-percent (105%) of the lowest price bidder. The Service-Disabled Veteran Preference is given in addition to any other procurement benefit the service-disabled veteran owned business may qualify for under Guam law.

22. WOMEN OWNED BUSINESS PREFERENCE: UOG will award the contract for this solicitation to bidders that are business concerns that are at least fifty-one-percent (51%) owned by women, who manage day-to-day operations and make long-term decisions, and: (1) The owner(s) of the business concern has filed individual tax returns on Guam for a period of at least three (3) consecutive years; (2) The business concern is licensed to do business on Guam; (3) The business concern maintains its headquarters on Guam; (4) the supply or service offered by the business concern is available within the period required by UOG; (5) The business concern is certified as a Women-Owned Small business (WOSB) or an Economically Disadvantaged Women-Owned Small Business (EDWOSB) by the U.S. Small Business Administration; and (6) The price for the supply or service does not exceed one-hundred-five-percent (105%) of the lowest price bidder. The Women Owned Business Preference is given in addition to any other procurement benefit the women owned business may qualify for under Guam law.

23. DETERMINING LOWEST PRICE IF BIDDERS CLAIM PREFERENCES. In accordance with 5 G.C.A. §5013(a), UOG shall determine the lowest price in the case of more than one (1) women-owned business, or a women-owned business and a service-disabled veteran owned business, who are competing for the same government contract.

24. MULTIPLE OR ALTERNATIVE BIDS. UOG shall not accept any multiple or alternative bid and shall reject any multiple or alternate bids its received. However, if a bidder clearly indicates a base bid, such base bid shall be considered for award as though it were the only bid submitted by the bidder. If UOG is not able to distinguish which bid is the base bid, it will reject all the multiple or alternative bids submitted by the bidder.

25. MULTI-TERM CONTRACT. If a multi-term contract is awarded for this solicitation, the amount of supplies or services stated on the bid price form of this solicitation shall be the amount of supplies or services required for the proposed contract period and the unit prices given by the bidder awarded the contract shall be the same throughout the multi-term contract period, except to the extent that price adjustments may be provided in this solicitation and the resulting contract, and UOG may cancel, after giving timely notice to the contractor, the multi-term contract if funds are not appropriated or otherwise made available to support continuation of performance in any fiscal period succeeding the first. However, this will not effect either UOG's rights or the contractor's rights under any termination clause in the contract. If the contract is canceled, the contractor will be reimbursed the unamortized, reasonably incurred, nonrecurring costs.

UNIVERSITY OF GUAM
UNIBETSEDÅT GUÅHAN

ADMINISTRATION & FINANCE
Consolidated Procurement Office

AMENDMENT 3

Invitation for Bid (IFB)
UOG IFB No. B21-17

Date Issued: November 19, 2021

"PURCHASING HVAC EQUIPMENT"

This is to notify all prospective offerors of the following amendment set forth below:

1.1 Question & Answer Sheet 1 as set forth in the attached.
1.2 REPLACE Exhibit B "Scope of Work & Bid Price Form" with corrected forms as set forth in the attached.
1.3 Copy of Pre-bid Conference Sign-In sheet as set forth in the attached.
1.4 Deadline for submission should read as follows: Monday, November 29, 2021 at 2:00 p.m. (your bid submission must be submitted electronically to the Bid Share folder provided by UOG Procurement Office on or before 2:00 p.m.) Bid opening will take place at 3:15 p.m. via ZOOM link provided by procurement office to all registered offerors.

All other terms and conditions remain the same.

Emily G. Gumataotao
Supply Management Administrator

Please acknowledge receipt and email: **uog.bids@triton.uog.edu:**

Name of company: ALL BUSINESS ENTERPRISES CORPORATION

NELIA T. BANGAYAN NOV. 30, 2021
Print Name/Signature/date

T: +1 671.735.2925 F: +1 671.735-3010 W: www.uog.edu E: uog.bids@triton.uog.edu
Mailing Address: 303 University Drive UOG Station Mangilao, Guam 96913

UOG INVITATION FOR BIDS NO. B21-17:
PURCHASING OF HVAC EQUIPMENT

QUESTION & ANSWER SHEET NO. 1
November 19, 2021

In response to the written "Questions" and/or 'Request for Clarifications' UOG received as of 10/26/2021 @ 4:49pm from vendor: **Guam Pacific Enterprise, Inc.**

Question 1: Section 5011 of Chapter 5 is not included in the Bid documents. (Policy In Favor of Serviced - Disabled Veteran Owned Business)

Answer: **Please refer to Amendment 2. Item 1.4 #21**

Question 2: Is the Bid All or None Bid?

Answer: **UOG confirms yes, this is an All or None Bid.**

Question 3: Is the installation required?

Answer: **UOG confirms Installation is not required.**

Question 4: Also, will you be using Federal Financial assistance Awards for this Bid therefore it is covered by Buy American Act.

Answer: **UOG confirms Funds are from Higher Education Emergency Relief Fund (HEERF) The Buy American Act is to be followed "to the most extent possible.**

In response to the written "Questions" and/or 'Request for Clarifications' UOG received as of 10/29/2021 @ 5:48pm from vendor: **MJM International Corporation**

Question 1: May I please get more information for the attached? Kindly clarify if it is the ton per unit and column (ton) is the total tonnage.

Answer: **UOG confirms ton is the total tonnage.**

In response to the written "Questions" and/or 'Request for Clarifications' UOG received as of 11/7/2021 @ 12:00pm from vendor: **JWS Refrigeration & A/C Ltd.**

Question 1: It was mentioned that you want to use only one manufacturer for the complete project, but you have Daikin condensers at the Marine Lab. It also is our understanding that many of the indoor units connected to these Daikin condensers also do not operate. These are VRF systems, which means they communicate with each other so you cannot use different manufacturers. Please clarify your intensions on this system.

Answer: **UOG Confirms there is no need for VRF/VRV units as Item Description/Location has been revised to remove Marine Lab requirement. Please refer to Amendment 3, item 1.2.**

Question 2: On the Science building 3rd floor you have two 10-ton condensers which you want to remove and replace with a single 20 ton, do those two-line sets go to one AHU with two circuits?

Answer: **UOG Confirms, Yes, they both connect to one (1) AHU. However, we are only requesting for condensing units not installation.**

Question 3: On the Lecture hall Auditorium you have the exact same issue you have two 10 ton condensers and you want to replace with a single 20 ton, do those two line sets go to one AHU with two circuits?

Answer: **UOG Confirms, Yes, they both connect to one (1) AHU. However, we are only requesting for condensing units not installation.**

Question 4: In the specs Page 28 2.2.1.1 it says "copper to copper condensing coils" and then it says "condensing coils to have a special coating for corrosion coating". Please clarify you want copper fins and a coating on the copper?

Answer: **UOG confirms, copper fins and a coating on the copper is needed.**

Question 5: In the specs Page 28 2.2.1.3 it says you want a "208 volt control circuit". Will 115 volts be acceptable?

Answer: **UOG confirms 115 volts are not acceptable**

Question 6: In Exhibit B page 63 Table 2.0 options No. 1 refers to "Service for maintenance and upkeep". Can you please clarify the meaning of that?

Answer: **UOG confirms although we are only soliciting for condenser units, we would like to understand what the maintenance and upkeep cost for your units. This will give us an idea of the overall cost of your unit.**

Question 7: In Exhibit B page 63 Table 2.0 options No. 3 refers to "Replacement/trade in program". Can you please clarify the meaning of that?

Answer: **UOG confirms although we are only soliciting for condenser units, we would like to understand what the maintenance and upkeep cost for your units. This will give us an idea of the overall cost of your unit.**

Question 8: Does this contract include installation of purchased equipment? At the site visit, it was stated that the contract did not include installation. However, in the bid packet Exhibit B: 2a. it says: "Any additional cost not stated in this bid but are required to complete the delivery and installation must be included in the bidders price" Please clarify.

Answer: **UOG confirms Installation is not required.**

In response to the written "Questions" and/or 'Request for Clarifications' UOG received as of 11/8/2021 @ 11:53am from vendor: **Green Energy Solutions, Inc.**

Question 1: Is the purchase funded by Federal Cares Act funds? If so, do the units need to be BAA compliant?

Answer: **UOG confirms Funds are from Higher Education Emergency Relief Fund (HEERF) The Buy American Act is to be followed "to the most extent possible.**

Question 2: The RFQ Equipment specifications refer to VFR /VRV Units. It does not go into detail on the units being requested.

Answer: **UOG Confirms there is no need for VRF/VRV units as Item Description/Location has been revised to remove Marine Lab requirement. Please refer to Amendment 3, item 1.2.**

Question 3: Of the units requested, the RFQ does not state whether they are Packaged Units, or Ducted Split Units that require Air Handling Units.

Answer: **UOG confirms we are purchasing "Ducted Split Condensers only. No AHU's in this bid.**

Question 4: The RFQ does not state efficiency requirements (EER rating)
Answer: **UOG confirms there are no EER rating.**

Question 5: Are you asking for direct replacements for the units in each of the buildings?

Answer: **UOG confirms, no. In some of the buildings we are consolidating units from smaller units to a bigger unit.**

Question 6: The RFQ mentions Storage, some about installation, & providing specs 5 weeks in advance of purchases. However, the Scope states it purchase only.

Answer: **UOG confirms no storage or installation required.**

Question 7: Does the bidder need to supply storage?

Answer: **UOG confirms no storage required**

In response to the written "Questions" and/or 'Request for Clarifications' UOG received as of 11/9/2021 @ 3:14pm from vendor: **Ability Solutions LLC**

Question 1: Can you provide a copy of the transcript for the sign-in on inspection day?

Answer: **Please refer to Amendment 3, item 1.3.**

In response to the written "Questions" and/or 'Request for Clarifications' UOG received as of 11/10/2021 @ 10:02am from vendor: **Ability Solutions LLC**

Question 1: May I inquire when the deadline is to deliver the equipment's?

Answer: **UOG confirms vendor to provide delivery deadline.**

SHEET 1 of

UNIVERSITY OF GUAM
UNIBETSEDÅT GUÅHAN

ATTENDENCE SHEET PRE-BID CONF.
11/03/21 10AM

REQUEST FOR PROPOSAL (RFP) REGISTER

ADMINISTRATION & FINANCE
Consolidated Procurement Office

OPA-PA-22-002-066

UOG RFP P21-17 "HVAC PURCHASES"

DATE ISSUED:
ISSUED:
CONFERENCE:

PAID	#	COMPANY NAME	FULL NAME (PERSON REQUESTING / PICKING UP)	EMAIL ADDRESS (PRINT NEATLY)	ADDRESS	DATE	TIME	PHONE NUMBER & FAX NUMBER	RFP SUBMISSION SUBMISSION DATE: TIME: DATE	TIME	REC BY
	1	Guam Pacific Ent.	Sedfrey M Lingayan	guampacific@gmail.com	Harmon	11/3/21	10:00	649-6997-8 649-6889 FAX			
	2	J&B Modern Tech	Gene Bangayan	~~Harmon Gu~~ genebangayan@jbmoderntech.com	Harmon	"	"	483 8895			
	3	MJM	CAROLINE DELOS REYES	caroline@mjmetc.com	Harmon	11/3/21	"	646-4394			
	4	J&B Modern tech	Deo Lagman	DLagman@jbmodern tech.com	Harmon	11/3/21	10AM	864-1811			
	5	J&K Modern Rech	PETER AVERY V. SIA		Harmon	11-3-21	10 AM	482-3995			
	6	JRW B/C & Ref. INC	TEDDY GLENN N Gomez	info@jrngu.com	175 Bannman Rt 16 TAM.	11/3/21	10:AM	649-8120/21 649-5737			
	7	JWS Ref+AC	Anthony Richard Sanchez	anthony@jwsguam.com	290 Pale Jose Salas Tamuning Guam 96913	11/3/21	10am	646-7334			
	8	JWS	Roger Jones	rogerj@jwsguam.com	290 SALAS TAMUN	"	"	787-1046			
	9	Deesonis	Chuck Sanchez	chuck.deesonis@gmail.com	Harmon	11/3/21	10a	747-1139			
	10	AMBIENT	JONATHAN JAVELLANA	j@ambient.com	163 CHALAN SAN ANTONIO STE 1K TAMUNING, GU	11/3	10AM	788-5662			
	11	JWS	ANDREW JAMES	ajames@jwsguam.com	290 SALAS TAMUNING	11/3	10 am	687-0577			
	12	PORT ENTERPRISE	JOHN T RYAN	jtryan@me.com	162 CHALAN SUETE TAMUNING 96913	11/3	10 AM	482-8291			

SHEET 2 of

UNIVERSITY OF GUAM
UNIBETSEDÅT GUÅHAN

REQUEST FOR PROPOSAL (RFP) REGISTER

ADMINISTRATION & FINANCE
Consolidated Procurement Office

OPA-PA-22-002-067

UOG RFP P21-17 "HVAC PURCHASES"

DATE ISSUED:
ISSUED:
CONFERENCE:

PAID	#	COMPANY NAME	FULL NAME (PERSON REQUESTING / PICKING UP)	EMAIL ADDRESS (PRINT NEATLY)	ADDRESS	DATE	TIME	PHONE NUMBER & FAX NUMBER	RFP SUBMISSION SUBMISSION DATE TIME: DATE	TIME	REC BY
	1	PORT ENT	Miguel Tanaka	doikin@guam.net	Yigo Guam	11-3-21	10:10	971-0188 646-1722			
	2	Ability Solutions	Nana Atalig	nacia@abilitysolutionsllc.biz	Dededo, Guam	11/3/21	10:15	483-3639 989-3630			
	3	J&B MED. TECH	BERNARD PEREZ	bfperez [illegible] gmail	DEDEDO, GU	11/3/21	10:15	482 4082			
	4										
	5										
	6										
	7										
	8										
	9										
	10										
	11										
	12										

UNIVERSITY OF GUAM
UNIBETSEDÅT GUÅHAN

ADMINISTRATION & FINANCE
Consolidated Procurement Office

AMENDMENT 4

Invitation for Bid (IFB)
UOG IFB No. B21-17

Date Issued: November 22, 2021

"PURCHASING HVAC EQUIPMENT"

This is to notify all prospective offerors of the following amendment set forth below:

1.1 Question & Answer Sheet 2 as set forth in the attached.

All other terms and conditions remain the same.

Emily G. Gumataotao
Supply Management Administrator

Please acknowledge receipt and email: **uog.bids@triton.uog.edu:**

Name of company: ALL BUSINESS ENTERPRISES CORPORATION

NELIA F. BANGAYAN NOV. 30, 2021
Print Name/Signature/date

T: +1 671.735.2925 F: +1 671.735-3010 W: www.uog.edu E: uog.bids@triton.uog.edu
Mailing Address: 303 University Drive UOG Station Mangilao, Guam 96913

UOG INVITATION FOR BIDS NO. B21-17:
PURCHASING OF HVAC EQUIPMENT

QUESTION & ANSWER SHEET NO. 2
November 22, 2021

In response to the written "Questions" and/or 'Request for Clarifications' UOG received as of 11/08/2021 @ 11:12am from vendor: **Guam Pacific Enterprise, Inc.**

Question 1: 1) The quote request is not clear what exactly is required because in Section 2.1.4, 2.2, 2.2.1 , 2.2.1.1specified large split system. Large split system implies 1 condensing unit connected to one indoor air handler.

Then there is another specs on VRF SYSTEMS which are 1 set of outdoor condensing units connected to multiple indoor units. VRF is completely different animal to above large split systems. Please see 2.1 ,2.1.1, 2.1.1.1,2.1.1.2

The lists of equipment could be condensing units for large split systems or VRF systems. Condensing units for large split systems can work with any air handler with DX coils. VRF condensing units could only work with indoor unit by the same manufacturer.

Question- Can you please clarify what is the design intention?

Answer: **UOG confirms this bid request is for a large split system condensing unit only.**

Question 2: Does UOG want VRF or large split systems ?

Answer: **UOG Confirms there is no need for VRF/VRV units as Item Description/Location has been revised to remove Marine Lab requirement. Please refer to Amendment 3, item 1.2.**

Question 3: Does UOG only wants outdoor condensing unit ?

Answer: **UOG confirms this bid request is for a large split system condensing unit only.**

Question 4: Is there any set of mechanical plans? Reason is for vendors to know the design intents, where each piece of equipment goes, what type of indoor units are needed. , control design , etc. These are not off the shelf type products so it is very risky for the purchaser to buy equipment like this.

Answer: **UOG confirms no mechanical plans needed as required information is provided. Please refer to Exhibit A. Please refer to Exhibit B issued in Amendment 3, item 1.2.**

UNIVERSITY OF GUAM
UNIBETSEDÅT GUÅHAN

ADMINISTRATION & FINANCE
Consolidated Procurement Office

AMENDMENT 5

Invitation for Bid (IFB)
UOG IFB No. B21-17

Date Issued: November 24, 2021

"PURCHASING HVAC EQUIPMENT"

This is to notify all prospective offerors of the following amendment set forth below:

1.1 Deadline for submission should read as follows: Monday, December 06, 2021 at 2:00 p.m. (your bid submission must be submitted electronically to the Bid Share folder provided by UOG Procurement Office on or before 2:00 p.m.) Bid opening will take place at 3:15 p.m. via ZOOM link provided by procurement office to all registered offerors.

All other terms and conditions remain the same.

Emily G. Gumataotao
Supply Management Administrator

Please acknowledge receipt and email: **uog.bids@triton.uog.edu:**

Name of company: ALL BUSINESS ENTERPRISES CORPORATION

NELIA F. BANGAYAN NOV. 30, 2021
Print Name/Signature/date

T: +1 671.735.2925 F: +1 671.735-3010 W: www.uog.edu E: uog.bids@triton.uog.edu
Mailing Address: 303 University Drive UOG Station Mangilao, Guam 96913

UNIVERSITY OF GUAM
UNIBETSEDÅT GUÅHAN

ADMINISTRATION & FINANCE
Consolidated Procurement Office

AMENDMENT 6

Invitation for Bid (IFB)
UOG IFB No. B21-17

Date Issued: December 3, 2021

"PURCHASING HVAC EQUIPMENT"

This is to notify all prospective offerors of the following amendment set forth below:

1.1 Question & Answer Sheet 3 as set forth in the attached.

All other terms and conditions remain the same.

Emily G. Gumataotao
Supply Management Administrator

Please acknowledge receipt and email: **uog.bids@triton.uog.edu:**

Name of company: ALL BUSINESS ENTERPRISES CORPORATION

NELIA F. BANGAYAN NOV. 3, 2021
Print Name/Signature/date

T: +1 671.735.2925 F: +1 671.735-3010 W: www.uog.edu E: uog.bids@triton.uog.edu
Mailing Address: 303 University Drive UOG Station Mangilao, Guam 96913

UOG INVITATION FOR BIDS NO. B21-17:
PURCHASING OF HVAC EQUIPMENT

QUESTION & ANSWER SHEET NO. 3
December 3, 2021

In response to the written "Questions" and/or 'Request for Clarifications' UOG received as of 11/05/2021 @ 2:28pm from vendor: **Guam Pacific Enterprise, Inc.**

Question 1: Did UOG remiss by requiring 15% Bid bond under Guam Law for a project that the funds being used is from financial assistance awards ? (American Rescue Funds Act)

Argument. 15 % bid bond pursuant to Guam law only applies for local funds. 15% BID BOND substantially burdens the small business owners and the manufacturers that they are representing

Therefore , it is non compliant and inconsistent with the Section1 and 3 of Executive Order 14005 of President Biden's American Made Act Law. The bid bond should be waived.

Answer: UOG confirms Bid security shall be required for all competitive sealed bidding for the procurement of supplies or services when the total price is estimated to exceed Twenty-Five Thousand Dollars ($25,000.00). 5 G.C.A. §5212(a). Further, Bid security shall be in an amount equal to fifteen percent (15%) of the total amount bid. 5 G.C.A. §5212(b). There is no exception in the aforementioned Guam Procurement Law for solicitations made by Public Corporations, such as UOG, that are federally funded. When Invitation for Bids requires bid security, noncompliance requires that the bid be rejected. 5 G.C.A. §5212(e).

Deo Lagman

From: UOG Procurement Bids <uog.bids@triton.uog.edu>
Sent: Friday, December 3, 2021 4:39 PM
To: Procurement Office
Subject: UOG IFB B21-17 : Purchasing of HVAC Equipment - AMENDMENT 6
Attachments: B21-17 AMEND 6.pdf

Håfa Adai & Good Afternoon,

Please see attached notice for the above referenced UOG IFB B21-17 - **AMENDMENT 6.**

All conditions of the bid remain the same.

Kind reminder, your original bid security should be receipted by our procurement office NLT bid submission deadline, Monday December 6, 2021 by 2pm.

The link for bid opening and link to upload bid submissions to our electronic share folder will also be provided on Monday December 6, 2021. Please submit 1 PDF file.

Please acknowledge receipt.

Thank you & Stay safe!

Note: All Amendments are updated and uploaded on our UOG Procurement Site to be downloaded for your reference.

Si Yu'os ma'åse' & Have a nice day!,

Respectfully,

UOG Procurement
Office: 671-735-2925
Fax: 671-735-3010
uog.bids@triton.uog.edu

The University of Guam is an equal opportunity provider and employer.

UNIVERSITY OF GUAM
UNIBETSEDÅT GUÅHAN

ADMINISTRATION & FINANCE
Consolidated Procurement Office

INVITATION FOR BID (IFB)
UOG BID No. B21-17

The University of Guam is soliciting sealed bids for:
PURCHASING OF HVAC EQUIPMENT

Copies of Instruction and Information may be obtained from: UOG Procurement Office
Uog.bids@triton.uog.edu
Tel: (671) 735-2925
Fax: (671) 735-3010
UOG Administration Building Mangilao, Guam

Please visit www.uog.edu/procurement to obtain a copy of the Bid Package. Once your request is received, you will receive a link allowing you access and ability to download the PDF file.

A non-refundable fee of $25.00 is ONLY required to submit a bid offer due before bid deadline. Payment may be made via cash,check or credit card at the UOG Business Office, Cashier Services located at the UOG Administration Building Mon-Fri from 8 am – 4 pm Pay by phone is available by contacting 735-2923/45/46, please reference Bid number and Bid title when making payment. Send proof of receipt to uog.bids@triton.uog.edu.

Deadline for Submission of Bid Packages is on **Monday, November 22, 2021** on or before 2:00 P.M. via electronic submission to electronic Bid Share folder provided by UOG Procurement Office. Bid Opening will take place at 3:00 pm through Zoom link provided to all bidders.

Note: Prospective bidders/respondents will automatically be registered with information provided on form when requesting for bid documents. Contact information should be accurateto ensure you receive any notices regarding any changes or updates to the IFB/RFP. UOG will not be liable for failure to provide notice to any party who inputs inaccurate contact information.

/s/Thomas W. Krise, Ph.D.
President

University of Guam is an equal opportunity employer and provider.
This Advertisement is paid for by University of Guam Funds.

AUTHORIZED FOR ANNOUNCEMENT
Thomas W. Krise, Ph.D.
President

UOG Bid No. B21-17 **Bid Registration Space below:** **Set No.**

REGISTER AS AN INTERESTED BIDDER TO RECEIVE DIRECT UPDATES
(Registration into the "Bidders List" is automatic when the form to request a bid packet is received)

UOG Payment Receipt No. _____ **Date:** __/__/__ **Payment Reference: Check No.** _____
Name of Company: _____
Physical Address: _____
Contact Person & Title: _____

Contact Numbers: **Tel.** _____ **Fax** _____ **Cellular** _____
E-Mail Address: _____

TABLE OF CONTENTS

Procurement Solicitation Instructions & Information

UNIVERSITY OF GUAM
INVITATION FOR BID
UOG BID NO. B21-17

PURCHASING OF HVAC EQUIPMENT

DATE ISSUED: **October 22, 2021**

UOG SECTION: FACILITIES MANAGEMENT & SERVICES (FMS),
ADMINISTRATION & FINANCE

ISSUED BY: UOG CONSOLIDATED PROCUREMENT OFFICE
TELEPHONE NO.: (671) 735-2925 FAX NO.: (671) 735-3010
Email: uog.bids@triton.uog.edu

INSTRUCTIONS TO BIDDERS

1. RECEIPT AND OPENING OF BIDS: Sealed bids for UOG **B21-17 PURCHASING OF HVAC EQUIPMENT** for the University of Guam (UOG must be received by the Procurement Office no later than:
TIME: 2:00 P.M. DATE: Monday, November 22, 2021

Bid submitted after the time and date specified above shall be rejected. Bid opening will be conducted electronically via Zoom Link at 3:00 pm; link will be provided through email to all registered offerors.

Attention is called to the fact that bidders not only offer to assume the obligations and liabilities imposed upon the contractor in the form of a contract, but are expressly made certain of the representations and warrants made herein. No effort is made to emphasize any particular provision of the contract, but bidders must familiarize themselves with every provision and its effect. This Bid is subject to **General Terms and Conditions of the Invitation for Sealed Bids (Attachment A) and the Special General Provisions (Attachment B).**

In consideration of the expense of the University of Guam of opening, tabulating, and evaluating this and other bids, and other considerations, the undersigned agrees that this bid shall remain firm and irrevocable within sixty (60) calendar days from the date of opening to supply any or all of items for which prices are quoted.

2. BIDDER'S QUALIFICATIONS (Attachment C): The University of Guam may require a bidder to present satisfactory evidence that he has sufficient experience and he is fully prepared, thus it is required that the bidder completely fill out the Bidder's Qualifications Form.

3. NON-COLLUSION AFFIDAVIT (Attachment D): Each person submitting a bid for any portion of the work covered by the bidding documents shall execute an affidavit, in the form provided with the Bid to the

effect that he has not colluded with any other person, firm or corporation in regard to any bid submitted. Such affidavit shall be attached to the proposal.

4. MAJOR SHAREHOLDERS AFFIDAVIT (Attachment E): As a condition to submitting of bids or proposals, any partnership, sole proprietorship or corporation doing business with the University of Guam shall submit an affidavit that lists the name and address of any person who has held more than ten percent (10) of outstanding shares in said partnership, sole proprietorship or corporation at any time during the twelve (12) month period immediately preceding submission of a proposal. The affidavit shall contain the number of shares or the percentage of all assets of such partnership, sole proprietorship or corporation which have been held by each person during the twelve (12) month period. In addition, the affidavit shall contain the name and address of any person who has received or is entitled to receive a commission, gratuity or other compensation for the procuring or assisting in obtaining business related to the bid or proposal for the Offeror and shall contain the amounts of any shall commission, gratuity or other compensation. The affidavit shall be open and available for inspection and copying.

5. AFFIDAVIT RE GRATUITIES, KICKBACKS AND FAVORS (Attachment G): The bidder, offeror or contractor represents that it will not violate the prohibition against gratuities and kickbacks and favors set forth (Gratuities and Kickbacks) in 5 GCA, Chapter 5, Article 11, Ethics in Public Contracting and Section 11.7 (Gratuities and Kickbacks and Favors) of the UOG Procurement Manual.

6. AFFIDAVIT RE ETHICAL STANDARDS (Attachment H): The bidder, offeror, or contractor represents that it has not knowingly influenced and promises that it will not knowingly influence a government employee to breach any of the ethical standards set forth in 5 GCA, Chapter 5, Article 11, and in Chapter 11 (Ethics in Public Contracting) of the UOG Procurement Manual.

7. COVENANT AGAINST CONTINGENT FEES (Attachment I): The prospective contractor represents as part of such contractor's bid or proposal that such contractor has/has not (Circle applicable word or words) retained any person or agency on a percentage, commission, or other contingent arrangement, except for retention of bona fide employees or bona fide established commercial selling agencies for the purpose of securing business.

8. DECLARATION RE COMPLIANCE WITH U.S. DEPARTMENT OF LABOR WAGE DETERMINATION (Attachment J): In accordance with 5 GCA §§ 5801 and 5802, as may be applicable, each bidder certifies that any of its employees whose purpose, in whole or in part, is the direct delivery of service contracted by the University shall be paid in accordance with the Wage Determination for Guam and the Northern Mariana Islands issued and promulgated by the U.S. Department of Labor for such labor as is employed in the direct delivery of contract deliverables to the University, including health and other similar benefits. The updated wage rate with the most current revision shall be included in the bid submission.

9. RIGHT TO ACCEPT AND REJECT BIDS: The President of the University of Guam reserves the unqualified right, in his sole and absolute discretion, to reject any and all bids, or to accept that bid or combination of bids, if any, which in his sole and absolute judgment will under all circumstances best serve the interests of the University of Guam. In the event that the successful bidder fails to execute the contract upon his part or to furnish a satisfactory performance and payment bond, the University, after declaring the security deposit of such bidder forfeited, reserves the option to accept the bid of any other bidder within ten (10) days from such default, in which case such acceptance shall have the same effect as to such bidder as though he was the originally successful bidder.

10. MODIFICATIONS PRIOR TO DATE SET FOR OPENING BIDS: The University reserves the right to revise or amend the specifications prior to the date set for opening bids. Such revisions and amendments, if any, will be announced by an amendment or amendments to this Invitation for Bids and shall be identified as such. It is required that the bidders acknowledge in writing receipt of all amendments issued and such acknowledgment must be included in the bid. The amendment shall refer to the portions of the Invitation for Bids it amends. Amendments shall be sent to all prospective Bidders known to have received an Invitation for Bids. Amendments shall be distributed within a reasonable time to allow prospective Bidders to consider the amendment in preparing their Bids. If the time and date set for receipt of bids will not permit such preparation, such time shall be increased to the extent possible in the amendment or, if necessary, by email or telephone and confirmed in the amendment.

11. CANCELLATION OF SOLICITATION: Prior to the date set for opening bids, a solicitation may be cancelled in whole or in part when the President or his designee determines in writing that the cancellation of the solicitation is in the University's best interest, in accordance with the University's Procurement Rules and Regulations.

12. METHOD OF AWARD: Bid shall be awarded to the [x] lowest, [ ] highest, responsible and responsive bidder whose bid meets the requirements and criteria set forth in the Invitation for Bids. A responsible bidder is one who has the capability in all respects to perform fully the contract requirements, and the integrity and reliability which will assure good faith performance. A responsive bidder is one who has submitted a bid which conforms in all material respects to the Invitation for Bids. The University reserves the right to waive any minor information of irregularity in Bids received. The President shall have the authority to award or reject Bids, in whole or in part for any one or more items if he determines it is in the public interest.

Award issued to the [x] lowest, [ ] highest, responsible and responsive bidder within the specified time for acceptance as indicated in the Bid, results in a binding contract without further action by either party provided the successful bidder executes a formal contract with the University. In case of any error in the extension of prices, unit price will govern. It is the policy of the Government of Guam to award Bids to qualified local vendors.

13. SUBMISSION OF BIDS:

- **a.** Bids and modifications thereof shall be submitted through electronic submission to the Share folder that UOG procurement office provides and addressed to the office specified in the Solicitation. The electronic file submission will show the hour and date of submission as specified in the Solicitation for receipt. The file should identify the Solicitation number, and the name of the bidder.
- **b.** Bids may be modified or withdrawn by written or telegraphic notice, provided such notice is received prior to the hour and date specified for receipt (see paragraph 9 of these instructions).
- **c.** Samples of items, when required, must be submitted within the time specified, unless otherwise specified by the University, at no expense to the University. If not destroyed by testing, samples will be returned at bidder's request and expense, unless otherwise specified by the Solicitation.
- **d.** Samples or descriptive literature should not be submitted unless it is required on this Solicitation. Regardless of any attempt by a bidder to condition the bid, unsolicited samples or descriptive literature will not be examined or tested at the bidder's risk, and will not be deemed to vary any of the provisions of this Solicitation.

14. FAILURE TO SUBMIT BID: If no bid is to be submitted, do not return the Solicitation unless otherwise specified. A letter or postcard shall be sent to the issuing office advising whether future Solicitations for the type of supplies or services covered by this Solicitation is desired.

15. PRE-BID CONFERENCES. Pre-Bid conferences will be permitted any time prior to the date established herein for submission of bid. The conferences will be conducted only to explain the procurement requirements for this Request for Proposal. The Authority will notify all Bidders of any substantive clarification provided in response to any inquiry. The Authority will extend the due date if such information significantly amends the solicitation or makes compliance with the original proposed due date impractical.

16. BID PACKET. The prospective bidder is required to read each and every page of the Bid Packet and by the act of submitting a proposal shall be deemed to have accepted all conditions contained therein. In no case will failure to inspect constitute grounds for claim or for the withdrawal of a bid after opening. Bid submission shall be sent electronically. Erasures or other changes in a bid must be explained or noted over the signature of the offeror. Bid submission containing any conditions, omissions, unexplained erasure or alterations or items not called for in the Bid packet, or irregularities of any kind may be rejected by the University as being incomplete.

17. BID PACKET FORM. A non-refundable fee of **$25.00 (U.S.)** shall be charged to submit a bid offer. All payments shall be made by cash, certified check or money order to the University of Guam. Cashier services are located at the UOG Administration Building Mon-Fri from 8am-4pm. Pay by phone is also available from 8am-4pm at 735-2923/45/46.

18. NOTICE OF AWARD. UOG will notify all bidders the status of the Bid and Notice of Award. Written notice of award will be public information and made a part of the contract file.

19. LOCAL PROCUREMENT PREFERENCE: "All procurement of supplies and services shall be made from among businesses licensed to do business on Guam in accordance with Guam Code Annotated Title 5 Chapter 5 Section 5008 and UOG Procurement Regulation Section 3.9.14.5."

20. BIODEGRADABLE, REUSEABLE, RECYCLABLE MATERIALS: 2 GAR Section 1102.2 (UOG Procurement Regulations Section 1.5) Bio-degradable, Reusable, Recyclable or Recycled Material or Any Combination: The Chief Procurement Officer, the Director of Public Works, or the head of the Purchasing Agency shall, whenever possible, procure products that are biodegradable, reusable, recyclable, or made of recycled material, or any of these in any combination. The cost (prior to any adjustments for local vendors) of appropriate biodegradable, reusable, recyclable, or recycled products may be as much as ten percent (10%) greater than the cost of the non-biodegradable, non-reusable, non-recyclable, or non-recycled products they are replacing.

ATTACHMENT A

GENERAL TERMS AND CONDITIONS FOR THE INVITATION FOR BIDS

1. COMPLIANCE WITH SPECIFICATIONS: Bidder should comply with specifications outlined.

2. LATE BIDS, LATE WITHDRAWALS, AND LATE MODIFICATIONS:

Any bid received after the time and date set for receipt of bids is late. Any withdrawal or modification of a bid received after the time and date set for opening of bids at the place designated for opening is late. (Section 3.9.11.1, University of Guam Procurement Manual).

3. DETERMINATION OF LOWEST RESPONSIBLE BIDDERS: In determining lowest responsible bidder, the University shall be guided by the following:

(a) Price of bid items.

(b) The ability, capacity, and skill of the bidder to perform.

(c) Whether the bidder can perform promptly or within the specified time.

(d) The character, integrity, reputation, judgment, experience, and efficiency of the bidder.

(e) The quality of performance of the bidder with regards to awards previously made to him.

(f) The previous and existing compliance by the bidder with laws and regulations relative to procurement.

(g) The sufficiency of the financial resources and ability of the bidder to perform.

(h) The quality, availability, and adaptability of the supplies for the use of the subject of the award.

(i) The ability of the bidder to provide future maintenance and services for the use of the subject of the award.

(j) The number and scope of the conditions attached to the bid.

4. LOW TIE BIDS: Low tie bids are low responsive bids from responsible bidders that are identical in price and which meet all the requirements and criteria set forth in the Invitation for Bids. Award shall not be made by drawing lots, except as set forth UOG Procurement Regulations Section 3.9.15, or by dividing business among identical bidders.

5. TAXES: Bidders are cautioned that they are subject to Guam Business Privilege Taxes, including 4% Gross Receipt Tax and Guam Income Taxes on Guam Transactions. Specific information of taxes may be obtained from the Director of Revenue and Taxation.

6. LICENSING: Bidders are cautioned that the University will not consider for award any Bid Offer submitted by a bidder who has not complied with Guam Licensing Law. Specific information on licenses may be obtained from the Director of Revenue and Taxation.

7. EQUAL EMPLOYMENT OPPORTUNITY: Section 3.01(1) of the President Executive Order No. 10935 dated March 7, 1965, requires the bidder not to discriminate against any employee or applicant for employment because of race, creed, color or national origin. The bidder will take affirmative action to

ensure that applicants are employed and the employees are treated equally during employment without regard to their race, creed, color or national origin.

8. DETERMINATION OF RESPONSIBILITY OF BIDDER: The University reserves the right for securing from bidders information necessary to determine whether or not they are responsible and to determine the responsibility in accordance with Section 3 of the General Terms and Conditions.

9. JUSTIFICATION OF DELAY: Vendors who are awarded items under the Bid guarantee that the goods will be delivered to their destination within the time specified. If the vendor is not able to meet the specified delivery date, he is required to notify the purchasing agent of such delay. Notification shall be in writing and should be received by the agent at least twenty-four (24) hours before the specified delivery date. Notification of delay shall include an explanation of the causes and reasons for the delay including statement(s) from supplier or shipping company causing the delay. The University of Guam reserves the right to reject delay justification if in the opinion of the President such justification is not adequate.

10. EQUAL OPPORTUNITY EMPLOYER AND PROVIDER: It is the policy of the University of Guam to provide equal opportunity in its higher educational mission and as employer. The University complies with all federal and local statutes, rules and regulations which prohibit discrimination in its policies and practices and direct affirmative action , including but not limited to Titles VII and IX of the Civil Rights Act of 1964 (as amended), Executive Order 11246, and the Equal Pay act of 1963 (as amended). The University shall promote a full realization of equal opportunity through a positive, continuing program, including a requirement that those doing business with the University also are equal opportunity employers.

11. EMPLOYMENT RESTRICTION: If a contract for services is awarded to the bidder or offeror, then the service provider must warrant that no person in its employment who has been convicted of a sex offense under the provisions of Chapter 25 of Title 9 of the Guam Code Annotated or of an offense defined in Article 2 of Chapter 28 of Title 9 of the Guam Code Annotated, or who has been convicted in any other jurisdiction of an offense with the same elements as heretofore define, or who is listed on the Sex Offender Registry, shall provide services on behalf of the service provider while on University of Guam property, with the exception of public highways. If any employee of a service provider is providing services on University property and is convicted subsequent to an award of a contract, then the service provider warrants that it will notify the University of the Conviction, within twenty-four hours of the conviction, and will immediately remove such convicted person from providing services on University property. If the service provider is found to be in violation of any of the provisions of this paragraph, then the University will give notice to the service provider to take corrective action. The service provider shall take corrective action within twenty-four hours of notice from the University, and the service provider shall notify the University when action has been taken. If the service provider fails to take corrective steps within twenty-four hours of notice from the University, then the University in its sole discretion may suspend temporarily any contract for services until corrective action has been taken.

12. (X) (Required if checked) BID SECURITY REQUIREMENT (Attachment D): Bidder is required to submit a Bid Security or standby irrevocable Letter of Credit or Certified Check or Cashier's Check or other security supplied in a form satisfactory to the University in the same bid envelope to be held by the University of Guam (UOG). A bidder should contact the University for Pre-approval of the bid security requirement before the deadline for submission of bid packages if it is proposing security in a form not specifically listed above. The bid security required under any applicable invitation for Bid shall not be released upon award of the bid, but instead shall continue in full force and effect until delivery of the

supplies or services required by any contract awarded to contractor under the associated Invitation for Bid is completed. The Bid Security, Letter of Credit, Certified Check or Cashier's Check must be issued by any local surety or banking institution licensed to do business on Guam and made payable to the University of Guam in the amount of fifteen percent (15%) of the total amount bid. The Original Bid Security must be submitted to the UOG Procurement office on or before bid submission deadline. Personal Checks will not be accepted as Bid Security.

If a successful Bidder (contractor) withdraws from the bid or fails to enter into contract within the prescribed time, such Bid guarantee will be forfeited to the University of Guam. Bids will be disqualified if not accompanied by Bid Security, Letter of Credit, Certified Check or Cashier's Check. Bidder must include in his/her bid, valid copies of a Power of Attorney from the Surety and a Certificate of Authority from the Government of Guam to show proof that the surety company named on the bond instrument is authorized by the Government of Guam and qualified to do business on Guam. For detailed information on bonding matters, contact the Department of Revenue and Taxation. Failure to submit a valid Power of Attorney and Certificate of Authority on the surety is cause for rejection of bid. (Pursuant to Public Law 27-127, all competitive sealed bidding for the procurement of supplies or services, exceeding $25,000.00, a 15% Bid Security of the total bid price must accompany the bid package.) When the Invitation for Bids requires bid security, non-compliance requires that the bid be rejected unless, pursuant to Policy Office regulations, it is determined that the bid fails to comply in a non-substantial manner with the security requirements.

13. INDEPENDENT CONTRACTOR: Contractor shall operate its business as an independent contractor and shall discharge all of its duties as such. No act performed or representation made, whether oral or written by Contractor with respect to third parties shall be binding on UOG.

14. INDEMNITY: Contractor agrees to indemnify and hold harmless UOG and its officers and employees from any claim, damage, liability, injury, expense or loss, including defense costs and attorney's fees, arising out of Contractor's duties under this agreement resulting from Contractor's negligence, save and except those caused by the negligence on the part of UOG.

ATTACHMENT B

SPECIAL GENERAL PROVISIONS

1. GENERAL INTENTION: It is the declared and acknowledged intention and meaning of this Special General Provision for the Bidder to provide the University of Guam with materials, supplies, or equipment completely assembled, and ready for use.

2. COMPETENCY OF BIDDERS: Bids will be considered only from such bidders who, in the opinion of the University, can show evidence of their ability, experience, and facilities to render satisfactory service.

3. CONTACT FOR CONTRACT ADMINISTRATION: If your firm receives a contract as a result of this invitation, please designate a person whom we may contact for prompt administration.

NAME: NELIA F. BANGAYAN TITLE: PRESIDENT

NAME OF COMPANY: ALL BUSINESS ENTERPRISES CORPORATION ADDRESS: P.O.BOX 8410, TAMUNING,GUAM 96931

TEL: 671-646-4435 FAX: 671-6460589 E-Mail Address: nbangayan@jbmoderntech.com

4. INSPECTION: All supplies, materials, or equipment delivered under this contract shall be subject to the inspection and test conducted by the University at destination. If, in any case, the supplies, materials, or equipment are found to be defective in material, workmanship, performance or otherwise does not conform to the specifications, the University shall have the right to reject the items or require that they be corrected. The number of days required for correction will be determined by the University of Guam.

6. BID ELECTRONIC FILE: Bid file shall be marked with the bidder's name, bid invitation number, and bid title.

NOTE: UNDER NO CIRCUMSTANCES WILL LATE BIDS BE ACCEPTED BY THIS OFFICE.

7. RECEIPT, OPENING AND RECORDING OF BIDS: Bids and modifications shall be publicly opened in the presence of one or more witnesses, at the time, date, and place designated in the Invitation for Bid. The name of each bidder, the bid price, and such other information as is deemed appropriate by the Procurement Officer, shall be read aloud and recorded, or otherwise made available. The names and addresses of required witnesses shall be recorded at the opening. The opened bids shall be available for public inspection except to the extent the bidder designates trade secrets or other proprietary data to be confidential as set forth in accordance with Section 8, below. Materials so designated shall accompany the bid and shall be readily separable from the bid in order to facilitate public inspection of the non-confidential portion of the bid. Prices, makes and models or catalogue numbers of the items offered, deliveries, and terms of payment shall be publicly available at the time of bid opening regardless of any designation to the contrary.

8. CONFIDENTIAL DATA: The Procurement Officer shall examine the bids to determine the validity of any requests for nondisclosure of trade secrets and other proprietary data identified in writing. If the parties do not agree as to the disclosure of data, the Procurement Officer shall inform the bidders in writing what portions of the bid will be disclosed and that, unless the bidders protest under Chapter 9 of UOG Procurement Regulations, the bids will be so disclosed. The bids shall be opened to public inspection subject to any continuing prohibition on the disclosure of confidential data.

9. INQUIRIES: All inquiries or questions and concerns must be submitted to the President of the University of Guam in writing through the procurement office at uog.bids@triton.uog.edu. Oral communications will not be considered.

ATTACHMENT C

BIDDER'S QUALIFICATIONS

To be submitted in accordance with the provisions set forth in the INSTRUCTIONS TO BIDDERS contained in the bidding documents for the project.

The undersigned Bidder makes the following representations relating to its proposal to the UNIVERSITY OF GUAM.

The word "it", used herein by way of reference to the undersigned, shall be deemed to mean "he or she" if the Bidder is an individual and "they" if the Bidder is a partnership

1. It maintains a permanent place of business at

   153 B HARMON INDUSTRIAL PARK,

   TAMUNING, GUAM 96913

2. STANDARD FOR DETERMINATION OF QUALIFIED BIDDER: In order to qualify as responsible, a prospective bidder must meet the following standards as they relate to the particular procurement under consideration:

   (a) Has adequate financial resources for performance, or has the ability to obtain such resources as required during performance.

   (b) Has the necessary experience, organization, technical qualifications, skills, and facilities, or has the ability to obtain them.

   (c) Is able to comply with the proposed or required performance schedule.

   (d) Has a satisfactory record of integrity, judgment, and performance.

   (e) Must be able to conform to the requirements of the Equal Employment Opportunity Act.

3. It hereby represents and warrants that all statements set forth herein are true and correct. (If the Bidder is a partnership, the partnership name must be signed, followed by the signature of at least one of the partners. If the Bidder is a corporation, the corporate name must be signed, followed by the signature of a duly authorized officer and the corporate seal affixed. A typewritten copy of all such names and signatures shall be appended. No alterations, erasures, corrections or interlineations will be permitted).

NELIA F. BANGAYAN – PRESIDENT

NAME OF BIDDER

ATTACHMENT D
BID SECURITY

BID BOND
NO. B21-17

KNOW ALL MEN BY THESE PRESENTS that _____, as Principal, hereinafter called the "Principal", and (Bonding Company), _____, a duly admitted insurer under the laws of the Territory of Guam, as Surety, hereinafter called the "Surety", are held firmly bound unto the University of Guam for the sum of _____ Dollars ($_____), for payment of which sum will and truly to be made, the said Principal and the said Surety bind ourselves, our heirs, executors, administrators, successors and assigns, jointly and severally, firmly by these presents.

Whereas, the Principal has submitted a bid for (identify project by number and brief description) _____
_____.

NOW, THEREFORE, if the University of Guam shall accept the bid of the Principal, the Principal shall enter into a Contract with the University of Guam in accordance with the terms of such bid, and give such bond or bonds as may be specified in bidding or Contract Documents with good and sufficient surety for the faithful performance of such Contract and for the prompt payment of labor and material furnished in the prosecution thereof. In the event of the failure of the Principal to enter such Contract and give such bond or bonds, if the Principal shall pay to the University of Guam the difference not to exceed the penalty hereof between the amounts specified in said bid and such larger amount for which the University of Guam may in good faith contract with another party to perform work covered by said bid or an appropriate liquidated amount as specified in the Invitation for Bid, then this obligation shall be null and void, but otherwise will remain in full force and effect.

Signed and sealed this _____ day of _____, 20_____

CASH BOND
CASHIERS
CHECK
SUBMITTED

_____
(PRINCIPAL) (SEAL)

_____
(WITNESS)

_____
(TITLE)

_____
(MAJOR OFFICER OF SURETY)

_____
(TITLE)

_____
(MAJOR OFFICER OF SURETY)

_____
(TITLE)

_____
(RESIDENT GENERAL AGENT)

ATTACHMENT E
MAJOR SHAREHOLDER DISCLOSURE AFFIDAVIT

CITY OF Hagatna)
) ss.
ISLAND OF GUAM)

A. I, the undersigned, being first duly sworn depose and say that I am an authorized representative of the offeror and that (please check only one):

( ) The offeror is an individual or sole proprietor and owns the entire (100%) interest in the offering business.

(x) The offeror is a corporation, partnership, joint venture, or association known as ALL BUSINESS ENTERPRISES CORPORATION (please state name of offeror company), and the persons, companies, partners, or joint ventures who have held more than 10% of the shares or interest in the offering business during the 365 days immediately preceding the submission date of the proposal are as follows (if none, please so state):

NAME	ADDRESS	% of Interest
NELIA F. BANGAYAN	P.O.BOX 9788,TAMUNING, GUAM 96931	55
HANNAH BANGAYAN	P.O.BOX 9788,TAMUNING,GUAM 96931	45

B. Further, I say that the persons who have received or are entitled to receive a commission, gratuity or other compensation for procuring or assisting in obtaining business related to the bid or proposal for which affidavit is submitted are as follows (if none, please so state):

NAME	ADDRESS	Compensation

C. If the ownership of the offering business should change between the time this affidavit is made and the time an award is made or a contract is entered into, then I promise personally to update the disclosure required by 5 GCA § 5233 by delivering another affidavit to the government.

Signature of one of the following:
Offeror, if the offeror is an individual;
Partner, if the offeror is a partnership;
XX Officer, if the offeror is a corporation

Subscribed and sworn to before me
This 2nd day of Dec, 20__

NOTARY PUBLIC
My commission expires _____, _____

JOSEPH B. QUINTANILLA, JR.
NOTARY PUBLIC
In and for Guam U.S.A.
My commission expires: August 17, 2023
P. O. Box 22649 Barrigada, Guam 96921

AG Procurement Form 002 (Rev Nov 17, 2005)

ATTACHMENT F
AFFIDAVIT re NON-COLLUSION

CITY OF Hagatna)
) ss.
ISLAND OF GUAM)

NELIA F. BANGAYAN (state name of affiant singing below), being first duly sworn deposes and says that:

1. The name of the offering company or individual is (state name of company) ALL BUSINESS ENTERPRISES CORPORATION

2. The proposal for the solicitation identified above is genuine and not collusive or a sham. The offeror has not colluded, conspired, connived or agreed, directly or indirectly, with any other offeror or person, to put in a sham proposal or to refrain from making an offer. The offeror has not in any manner, directly or indirectly, sought by an agreement or collusion, or communication or conference, with any person to fix the proposal price of offeror or of any other offeror, or to fix any overhead, profit or cost element of said proposal price, or of that of any other offeror, or to secure any advantage against the government of Guam or any person interested in the proposed contract. All statements in this affidavit and in the proposal are true to the best of the knowledge of the undersigned. This statement is made pursuant to 2 GAR Division 4 § 3126(b).

3. I make this statement on behalf of myself as a representative of the offeror, and on behalf of the offeror's officers, representatives, agents, subcontractors, and employees.

Signature of one of the following:
Offeror, if the offeror is an individual;
Partner, if the offeror is a partnership;
XX Officer, if the offeror is a corporation

Subscribed and sworn to before me
This 2nd day of Dec, 2021

JOSEPH B. QUINTANILLA, JR.
NOTARY PUBLIC
In and for Guam U.S.A.
My commission expires: August 17, 2023
P. O. Box 22649 Barrigada, Guam 96921

NOTARY PUBLIC
My commission expires _____, _____
(AG Procurement Form 003 (Jul. 12, 2010)

QUINTANILLA, JR. NOTARY PUBLIC U.S.A.

ATTACHMENT G

AFFIDAVIT re GRATUITIES, KICKBACKS AND FAVORS

CITY OF Hagatna)
) ss.
ISLAND OF GUAM)

NELIA F. BANGAYAN (state name of affiant signing below), being first duly sworn, deposes and says that:

1. The name of the offering firm or individual is (state name of offeror company) ALL BUSINESS ENTERPRISES CORPORATION Affiant is NELIA F. BANGAYAN (state one of the following: the offeror, a partner of the offeror, and officer of the offeror) making the foregoing identified bid or proposal.
2. To the best of affiant's knowledge, neither affiant, nor any of the offeror's officers, representatives, agents subcontractors, or employees have violated, are violating the prohibition against gratuities, kickbacks and favors set forth in UOG Procurement Manual Section 11.7 Further, affiant promises, on behalf of offeror, not to violate the prohibition against gratuities, kickbacks and favors as set forth in UOG Procurement Manual Section 11.7.
3. To the best of affiant's knowledge, neither affiant, nor any of the offeror's officers, representatives, agents, subcontractors, or employees have offered, given or agreed to give, any government of Guam employee or former government employee, any payment, gift, kickback, gratuity or offer of employment in connection with the offeror's proposal.
4. I make this statement on behalf of myself as a representative of the offeror, and on behalf of the offeror's officers, representatives, agents, subcontractors, and employees.

Signature of one of the following:
Offeror, if the offeror is an individual;
Partner, if the offeror is a partnership;
XX Officer, if the offeror is a corporation

Subscribed and sworn to before me

This 2nd day of Dec, 2021

NOTARY PUBLIC
My commission expires _____, _____

JOSEPH B. QUINTANILLA, JR.
NOTARY PUBLIC
In and for Guam U.S.A.
My commission expires August 17, 2023

(AG Procurement Form 004 (Jul 12, 2010)

J. QUINTANILLA JR. NOTARY PUBLIC GUAM, U.S.A.

ATTACHMENT H
AFFIDAVIT RE ETHICAL STANDARDS

CITY OF Hagatna)
) ss.
ISLAND OF GUAM)

NELIA F. BANGAYAN (state name of affiant signing below), being first duly sworn, deposes and says that:

The affiant is PRESIDENT (state one of the following: the offeror, a partner of the offeror, an officer of the offeror) making the foregoing identified bid or proposal. To the best of affiant's knowledge, neither affiant nor any officers, representatives, agents, subcontractors or employees of offeror have knowingly influenced any government of Guam employee to breach any of the ethical standards set forth in 5 GCA Chapter 5, Article 11. Further, affiant promises that neither he or she, nor any officer, reprehensive, agent, subcontractor, or employee of offeror will knowingly influence any government of Guam employee to breach any ethical standards set forth in 5 GCA Chapter 5, Article 11. These statements are made pursuant to UOG Procurement Manual Section 11.3.3.

Signature of one of the following:
Offeror, if the offeror is an individual;
Partner, if the offeror a partnership;
XX Officer, if the offeror is a corporation.

Subscribed and sworn to before me

This 2nd day of Dec, 2021

NOTARY PUBLIC

My commission expires _____, _____.

JOSEPH B. QUINTANILLA, JR.
NOTARY PUBLIC
In and for Guam U.S.A.
My commission expires: August 17, 2023
P. O. Box 22649 Barrigada, Guam 96921

(AG Procurement Form 005 (Jul 12, 2010)

ATTACHMENT I

DECLARATION re COMPLIANCE WITH U.S. DOL WAGE DETERMINATIONS

Procurement No.: UOG BID B21-17

Name of Offeror Company: ALL BUSINESS ENTERPRISES CORPORATION

I, NELIA F. BANGAYAN hereby certify under penalty of perjury:

(1) That I am PRESIDENT (please select one: *the offeror, a partner of the offeror, an officer of the offeror)* making the bid or proposal in the foregoing identified procurement;

(2) That I have read and understand the provisions of 5 GCA § 5801and 5802 which read:

§ 5801. Wage Determination Established.

In such cases where the government of Guam enters into contractual arrangements with a sole proprietorship, a partnership or a corporation ("contractor") for the provision of a service to the government of Guam, and in such cases where the contractor employs a person(s) whose purpose, in whole or in part, is the direct delivery of service contracted by the government of Guam, then the contractor shall pay such employee(s) in accordance with the Wage Determination for Guam and the Northern Mariana Islands issued and promulgated by the U.S. Department of Labor for such labor as is employed in the direct delivery of contract deliverables to the government of Guam.

The Wage Determination most recently issued by the U.S. Department of Labor at the time a contract is awarded to a contractor by the government of Guam shall be used to determine wages, which shall be paid to employees pursuant to this Article. Should any contract contain a renewal clause, then at the time of renewal adjustments, there shall be made stipulations contained in the contract for applying the Wage Determination, as required by this Article, so the Wage Determination promulgated by the U.S. Department of Labor on a date most recent to the renewal date shall apply.

§ 5802. Benefits.

In addition to the Wage Determination detailed in this Article, any contract to which this Article applies shall also contain provisions mandating health and similar benefits for employees covered by this Article, such benefits having a minimum value as detailed in the Wage Determination issued and promulgated by the U.S. Department of Labor, and shall contain provisions guaranteeing a minimum of ten (10) paid holidays per annum per employees.

(3) That the offeror is in full compliance with 5 GCA § 5801 and § 5802, as may be applicable to the procurement referenced herein;

(4) That I have attached the most recent wage determination applicable to Guam issued by the U.S. Department of Labor. ***(INSTRUCTIONS – Please attach most updated version to bid package)***

(AG Procurement Form 006 (Feb. 16, 2010)

ATTACHMENT J
AFFIDAVIT re CONTINGENT FEES

CITY OF Hagatna)
) ss.
ISLAND OF GUAM)

NELIA F. BANGAYAN (state name of affiant signing below), being first duly sworn, deposes and says that:

1. The name of the offering company or individual is (state name of company) ALL BUSINESS ENTERPRISES CORPORATION

2. As a part of the offering company's bid or proposal, to the best of my knowledge, the offering company has not retained any person or agency on a percentage, commission, or other contingent arrangement to secure this contract. This statement is made pursuant to UOG Procurement Manual Section 11.8 .2

3. As a part of the offering company's bid or proposal, to the best of my knowledge, the offering company has not retained a person to solicit or secure a contract with the government of Guam upon an agreement or understanding for a commission, percentage, brokerage, or contingent fee, except for retention of bona fide employees or bona fide established commercial selling agencies for the purpose of securing business. This statement is made pursuant to UOG Procurement Manual Section 11.8.1.

4. I make these statements on behalf of myself as a representative of the offeror, and on behalf of the offeror's officers, representatives, agents, subcontractors, and employees.

Signature of one of the following:
Offeror, if the offeror is an individual;
Partner, if the offeror is a partnership;
XX Officer, if the offeror is a corporation

Subscribed and sworn to before me
This 2nd day of Dec, 2021

NOTARY PUBLIC
My commission expires _____,

JOSEPH B. QUINTANILLA, JR.
NOTARY PUBLIC
In and for Guam U.S.A.
My commission expires: August 17, 2023
P. O. Box 22649 Barrigada, Guam 96921

(AG Procurement Form 007 (Jul 15 2010)

QUINTANILLA NOTARY PUBLIC GUAM, U.S.A.

"REGISTER OF WAGE DETERMINATIONS UNDER THE SERVICE CONTRACT ACT
By direction of the Secretary of Labor

U.S. DEPARTMENT OF LABOR
EMPLOYMENT STANDARDS ADMINISTRATION
WAGE AND HOUR DIVISION
WASHINGTON D.C. 20210

Daniel W. Simms
Director

Division of
Wage Determinations

Wage Determination No.: 2015-5693
Revision No.: 13
Date Of Last Revision: 08/04/2021

Note: Under Executive Order (EO) 13658 an hourly minimum wage of $10.95 for calendar year 2021 applies to all contracts subject to the Service Contract Act for which the contract is awarded (and any solicitation was issued) on or after January 1 2015. If this contract is covered by the EO the contractor must pay all workers in any classification listed on this wage determination at least $10.95 per hour (or the applicable wage rate listed on this wage determination if it is higher) for all hours spent performing on the contract in calendar year 2021. The EO minimum wage rate will be adjusted annually. Additional information on contractor requirements and worker protections under the EO is available at www.dol.gov/whd/govcontracts.

States: Guam Northern Marianas Wake Island

Area: Guam Statewide

Northern Marianas Statewide

Wake Island Statewide

Fringe Benefits Required Follow the Occupational Listing

OCCUPATION CODE - TITLE	FOOTNOTE	RATE
01000 - Administrative Support And Clerical Occupations		
01011 - Accounting Clerk I		13.57
01012 - Accounting Clerk II		15.23
01013 - Accounting Clerk III		17.04
01020 - Administrative Assistant		21.43
01035 - Court Reporter		17.40
01041 - Customer Service Representative I		11.51
01042 - Customer Service Representative II		12.94
01043 - Customer Service Representative III		14.12
01051 - Data Entry Operator I		12.15
01052 - Data Entry Operator II		13.25
01060 - Dispatcher Motor Vehicle		17.39
01070 - Document Preparation Clerk		13.85
01090 - Duplicating Machine Operator		13.85
01111 - General Clerk I		10.35
01112 - General Clerk II		11.29
01113 - General Clerk III		12.68
01120 - Housing Referral Assistant		19.39
01141 - Messenger Courier		11.37
01191 - Order Clerk I		12.57
01192 - Order Clerk II		13.71
01261 - Personnel Assistant (Employment) I		15.95
01262 - Personnel Assistant (Employment) II		17.85
01263 - Personnel Assistant (Employment) III		19.89
01270 - Production Control Clerk		21.78
01290 - Rental Clerk		11.10

01300 - Scheduler Maintenance	15.55
01311 - Secretary I	15.55
01312 - Secretary II	17.40
01313 - Secretary III	19.39
01320 - Service Order Dispatcher	15.40
01410 - Supply Technician	21.43
01420 - Survey Worker	16.96
01460 - Switchboard Operator/Receptionist	10.36
01531 - Travel Clerk I	13.01
01532 - Travel Clerk II	14.12
01533 - Travel Clerk III	15.09
01611 - Word Processor I	14.53
01612 - Word Processor II	16.31
01613 - Word Processor III	18.26
05000 - Automotive Service Occupations	
05005 - Automobile Body Repairer Fiberglass	15.46
05010 - Automotive Electrician	14.52
05040 - Automotive Glass Installer	13.58
05070 - Automotive Worker	13.58
05110 - Mobile Equipment Servicer	11.65
05130 - Motor Equipment Metal Mechanic	15.46
05160 - Motor Equipment Metal Worker	13.58
05190 - Motor Vehicle Mechanic	15.46
05220 - Motor Vehicle Mechanic Helper	10.66
05250 - Motor Vehicle Upholstery Worker	12.64
05280 - Motor Vehicle Wrecker	13.58
05310 - Painter Automotive	14.52
05340 - Radiator Repair Specialist	13.58
05370 - Tire Repairer	12.67
05400 - Transmission Repair Specialist	15.46
07000 - Food Preparation And Service Occupations	
07010 - Baker	10.47
07041 - Cook I	13.26
07042 - Cook II	15.46
07070 - Dishwasher	9.31
07130 - Food Service Worker	9.45
07210 - Meat Cutter	12.13
07260 - Waiter/Waitress	9.27
09000 - Furniture Maintenance And Repair Occupations	
09010 - Electrostatic Spray Painter	18.04
09040 - Furniture Handler	10.95
09080 - Furniture Refinisher	18.04
09090 - Furniture Refinisher Helper	13.27
09110 - Furniture Repairer Minor	15.70
09130 - Upholsterer	18.04
11000 - General Services And Support Occupations	
11030 - Cleaner Vehicles	9.35
11060 - Elevator Operator	9.54
11090 - Gardener	13.00
11122 - Housekeeping Aide	9.54
11150 - Janitor	9.54
11210 - Laborer Grounds Maintenance	9.82
11240 - Maid or Houseman	9.32
11260 - Pruner	8.79
11270 - Tractor Operator	11.90
11330 - Trail Maintenance Worker	9.82
11360 - Window Cleaner	10.66
12000 - Health Occupations	
12010 - Ambulance Driver	18.23
12011 - Breath Alcohol Technician	18.23
12012 - Certified Occupational Therapist Assistant	25.01
12015 - Certified Physical Therapist Assistant	25.01
12020 - Dental Assistant	16.32
12025 - Dental Hygienist	36.12
12030 - EKG Technician	25.99

12035 - Electroneurodiagnostic Technologist		25.99
12040 - Emergency Medical Technician		18.23
12071 - Licensed Practical Nurse I		16.30
12072 - Licensed Practical Nurse II		18.23
12073 - Licensed Practical Nurse III		20.32
12100 - Medical Assistant		12.26
12130 - Medical Laboratory Technician		18.82
12160 - Medical Record Clerk		13.61
12190 - Medical Record Technician		17.77
12195 - Medical Transcriptionist		16.30
12210 - Nuclear Medicine Technologist		40.06
12221 - Nursing Assistant I		11.34
12222 - Nursing Assistant II		12.75
12223 - Nursing Assistant III		13.91
12224 - Nursing Assistant IV		15.61
12235 - Optical Dispenser		18.23
12236 - Optical Technician		16.30
12250 - Pharmacy Technician		15.49
12280 - Phlebotomist		16.30
12305 - Radiologic Technologist		25.33
12311 - Registered Nurse I		23.18
12312 - Registered Nurse II		28.36
12313 - Registered Nurse II Specialist		28.36
12314 - Registered Nurse III		34.32
12315 - Registered Nurse III Anesthetist		34.32
12316 - Registered Nurse IV		41.13
12317 - Scheduler (Drug and Alcohol Testing)		22.58
12320 - Substance Abuse Treatment Counselor		22.58
13000 - Information And Arts Occupations		
13011 - Exhibits Specialist I		21.20
13012 - Exhibits Specialist II		26.27
13013 - Exhibits Specialist III		32.13
13041 - Illustrator I		21.20
13042 - Illustrator II		26.27
13043 - Illustrator III		32.13
13047 - Librarian		29.09
13050 - Library Aide/Clerk		16.88
13054 - Library Information Technology Systems Administrator		26.27
13058 - Library Technician		16.64
13061 - Media Specialist I		18.96
13062 - Media Specialist II		21.20
13063 - Media Specialist III		23.63
13071 - Photographer I		18.96
13072 - Photographer II		21.20
13073 - Photographer III		26.27
13074 - Photographer IV		32.13
13075 - Photographer V		38.88
13090 - Technical Order Library Clerk		21.20
13110 - Video Teleconference Technician		18.96
14000 - Information Technology Occupations		
14041 - Computer Operator I		15.71
14042 - Computer Operator II		17.22
14043 - Computer Operator III		19.19
14044 - Computer Operator IV		21.33
14045 - Computer Operator V		23.62
14071 - Computer Programmer I	(see 1)	15.73
14072 - Computer Programmer II	(see 1)	19.50
14073 - Computer Programmer III	(see 1)	23.84
14074 - Computer Programmer IV	(see 1)	
14101 - Computer Systems Analyst I	(see 1)	24.23
14102 - Computer Systems Analyst II	(see 1)	
14103 - Computer Systems Analyst III	(see 1)	
14150 - Peripheral Equipment Operator		15.71
14160 - Personal Computer Support Technician		21.33

14170 - System Support Specialist	21.24
15000 - Instructional Occupations	
15010 - Aircrew Training Devices Instructor (Non-Rated)	24.23
15020 - Aircrew Training Devices Instructor (Rated)	29.32
15030 - Air Crew Training Devices Instructor (Pilot)	34.91
15050 - Computer Based Training Specialist / Instructor	24.23
15060 - Educational Technologist	27.61
15070 - Flight Instructor (Pilot)	34.91
15080 - Graphic Artist	20.47
15085 - Maintenance Test Pilot Fixed Jet/Prop	34.91
15086 - Maintenance Test Pilot Rotary Wing	34.91
15088 - Non-Maintenance Test/Co-Pilot	34.91
15090 - Technical Instructor	17.67
15095 - Technical Instructor/Course Developer	23.78
15110 - Test Proctor	15.70
15120 - Tutor	15.70
16000 - Laundry Dry-Cleaning Pressing And Related Occupations	
16010 - Assembler	10.12
16030 - Counter Attendant	10.12
16040 - Dry Cleaner	11.56
16070 - Finisher Flatwork Machine	10.12
16090 - Presser Hand	10.12
16110 - Presser Machine Drycleaning	10.12
16130 - Presser Machine Shirts	10.12
16160 - Presser Machine Wearing Apparel Laundry	10.12
16190 - Sewing Machine Operator	12.04
16220 - Tailor	12.52
16250 - Washer Machine	10.60
19000 - Machine Tool Operation And Repair Occupations	
19010 - Machine-Tool Operator (Tool Room)	19.46
19040 - Tool And Die Maker	24.46
21000 - Materials Handling And Packing Occupations	
21020 - Forklift Operator	13.96
21030 - Material Coordinator	21.78
21040 - Material Expediter	21.78
21050 - Material Handling Laborer	11.37
21071 - Order Filler	9.76
21080 - Production Line Worker (Food Processing)	13.96
21110 - Shipping Packer	17.12
21130 - Shipping/Receiving Clerk	17.12
21140 - Store Worker I	15.22
21150 - Stock Clerk	21.40
21210 - Tools And Parts Attendant	13.96
21410 - Warehouse Specialist	13.96
23000 - Mechanics And Maintenance And Repair Occupations	
23010 - Aerospace Structural Welder	25.04
23019 - Aircraft Logs and Records Technician	19.47
23021 - Aircraft Mechanic I	23.84
23022 - Aircraft Mechanic II	25.04
23023 - Aircraft Mechanic III	26.30
23040 - Aircraft Mechanic Helper	16.58
23050 - Aircraft Painter	22.39
23060 - Aircraft Servicer	19.47
23070 - Aircraft Survival Flight Equipment Technician	22.39
23080 - Aircraft Worker	21.03
23091 - Aircrew Life Support Equipment (ALSE) Mechanic I	21.03
23092 - Aircrew Life Support Equipment (ALSE) Mechanic II	23.84
23110 - Appliance Mechanic	19.46
23120 - Bicycle Repairer	15.61
23125 - Cable Splicer	19.59
23130 - Carpenter Maintenance	16.07
23140 - Carpet Layer	18.20
23160 - Electrician Maintenance	18.05

23181 - Electronics Technician Maintenance I	18.20
23182 - Electronics Technician Maintenance II	19.46
23183 - Electronics Technician Maintenance III	20.72
23260 - Fabric Worker	16.94
23290 - Fire Alarm System Mechanic	16.77
23310 - Fire Extinguisher Repairer	15.61
23311 - Fuel Distribution System Mechanic	20.72
23312 - Fuel Distribution System Operator	15.61
23370 - General Maintenance Worker	12.01
23380 - Ground Support Equipment Mechanic	23.84
23381 - Ground Support Equipment Servicer	19.47
23382 - Ground Support Equipment Worker	21.03
23391 - Gunsmith I	15.61
23392 - Gunsmith II	18.20
23393 - Gunsmith III	20.72
23410 - Heating Ventilation And Air-Conditioning Mechanic	17.50
23411 - Heating Ventilation And Air Contidioning Mechanic (Research Facility)	18.61
23430 - Heavy Equipment Mechanic	19.27
23440 - Heavy Equipment Operator	17.76
23460 - Instrument Mechanic	20.72
23465 - Laboratory/Shelter Mechanic	19.46
23470 - Laborer	11.37
23510 - Locksmith	19.46
23530 - Machinery Maintenance Mechanic	23.13
23550 - Machinist Maintenance	20.72
23580 - Maintenance Trades Helper	10.67
23591 - Metrology Technician I	20.72
23592 - Metrology Technician II	22.03
23593 - Metrology Technician III	23.33
23640 - Millwright	20.72
23710 - Office Appliance Repairer	19.46
23760 - Painter Maintenance	14.08
23790 - Pipefitter Maintenance	18.39
23810 - Plumber Maintenance	17.27
23820 - Pneudraulic Systems Mechanic	20.72
23850 - Rigger	20.72
23870 - Scale Mechanic	18.20
23890 - Sheet-Metal Worker Maintenance	17.35
23910 - Small Engine Mechanic	18.20
23931 - Telecommunications Mechanic I	19.76
23932 - Telecommunications Mechanic II	21.01
23950 - Telephone Lineman	18.24
23960 - Welder Combination Maintenance	18.31
23965 - Well Driller	21.13
23970 - Woodcraft Worker	20.71
23980 - Woodworker	15.61
24000 - Personal Needs Occupations	
24550 - Case Manager	15.01
24570 - Child Care Attendant	10.09
24580 - Child Care Center Clerk	13.25
24610 - Chore Aide	12.78
24620 - Family Readiness And Support Services Coordinator	15.01
24630 - Homemaker	16.12
25000 - Plant And System Operations Occupations	
25010 - Boiler Tender	20.72
25040 - Sewage Plant Operator	21.59
25070 - Stationary Engineer	20.72
25190 - Ventilation Equipment Tender	14.29
25210 - Water Treatment Plant Operator	21.59
27000 - Protective Service Occupations	
27004 - Alarm Monitor	10.90
27007 - Baggage Inspector	9.48

27008 - Corrections Officer	12.05
27010 - Court Security Officer	12.05
27030 - Detection Dog Handler	10.90
27040 - Detention Officer	12.05
27070 - Firefighter	12.05
27101 - Guard I	9.48
27102 - Guard II	10.90
27131 - Police Officer I	12.05
27132 - Police Officer II	13.40
28000 - Recreation Occupations	
28041 - Carnival Equipment Operator	13.24
28042 - Carnival Equipment Repairer	14.46
28043 - Carnival Worker	9.78
28210 - Gate Attendant/Gate Tender	13.18
28310 - Lifeguard	11.01
28350 - Park Attendant (Aide)	14.74
28510 - Recreation Aide/Health Facility Attendant	11.84
28515 - Recreation Specialist	18.26
28630 - Sports Official	11.74
28690 - Swimming Pool Operator	17.71
29000 - Stevedoring/Longshoremen Occupational Services	
29010 - Blocker And Bracer	25.98
29020 - Hatch Tender	25.98
29030 - Line Handler	25.98
29041 - Stevedore I	24.18
29042 - Stevedore II	27.79
30000 - Technical Occupations	
30010 - Air Traffic Control Specialist Center (HFO) (see 2)	40.29
30011 - Air Traffic Control Specialist Station (HFO) (see 2)	27.78
30012 - Air Traffic Control Specialist Terminal (HFO) (see 2)	30.59
30021 - Archeological Technician I	17.49
30022 - Archeological Technician II	19.56
30023 - Archeological Technician III	24.21
30030 - Cartographic Technician	23.18
30040 - Civil Engineering Technician	23.08
30051 - Cryogenic Technician I	25.57
30052 - Cryogenic Technician II	28.24
30061 - Drafter/CAD Operator I	17.49
30062 - Drafter/CAD Operator II	19.56
30063 - Drafter/CAD Operator III	20.77
30064 - Drafter/CAD Operator IV	25.57
30081 - Engineering Technician I	14.84
30082 - Engineering Technician II	16.66
30083 - Engineering Technician III	18.64
30084 - Engineering Technician IV	23.08
30085 - Engineering Technician V	28.24
30086 - Engineering Technician VI	34.16
30090 - Environmental Technician	23.08
30095 - Evidence Control Specialist	23.08
30210 - Laboratory Technician	20.77
30221 - Latent Fingerprint Technician I	25.57
30222 - Latent Fingerprint Technician II	28.24
30240 - Mathematical Technician	23.34
30361 - Paralegal/Legal Assistant I	19.54
30362 - Paralegal/Legal Assistant II	24.21
30363 - Paralegal/Legal Assistant III	29.61
30364 - Paralegal/Legal Assistant IV	35.83
30375 - Petroleum Supply Specialist	28.24
30390 - Photo-Optics Technician	21.93
30395 - Radiation Control Technician	28.24
30461 - Technical Writer I	23.08
30462 - Technical Writer II	28.24
30463 - Technical Writer III	34.16
30491 - Unexploded Ordnance (UXO) Technician I	25.60
30492 - Unexploded Ordnance (UXO) Technician II	30.98

30493 - Unexploded Ordnance (UXO) Technician III		37.13
30494 - Unexploded (UXO) Safety Escort		25.60
30495 - Unexploded (UXO) Sweep Personnel		25.60
30501 - Weather Forecaster I		25.57
30502 - Weather Forecaster II		31.09
30620 - Weather Observer Combined Upper Air Or Surface Programs	(see 2)	20.77
30621 - Weather Observer Senior	(see 2)	23.08
31000 - Transportation/Mobile Equipment Operation Occupations		
31010 - Airplane Pilot		30.98
31020 - Bus Aide		8.15
31030 - Bus Driver		10.66
31043 - Driver Courier		9.69
31260 - Parking and Lot Attendant		9.91
31290 - Shuttle Bus Driver		11.65
31310 - Taxi Driver		11.41
31361 - Truckdriver Light		10.59
31362 - Truckdriver Medium		11.61
31363 - Truckdriver Heavy		14.64
31364 - Truckdriver Tractor-Trailer		14.64
99000 - Miscellaneous Occupations		
99020 - Cabin Safety Specialist		15.10
99030 - Cashier		9.63
99050 - Desk Clerk		9.70
99095 - Embalmer		25.60
99130 - Flight Follower		25.60
99251 - Laboratory Animal Caretaker I		23.38
99252 - Laboratory Animal Caretaker II		25.54
99260 - Marketing Analyst		21.54
99310 - Mortician		25.60
99410 - Pest Controller		14.61
99510 - Photofinishing Worker		13.45
99710 - Recycling Laborer		17.32
99711 - Recycling Specialist		23.38
99730 - Refuse Collector		16.40
99810 - Sales Clerk		9.87
99820 - School Crossing Guard		17.27
99830 - Survey Party Chief		23.01
99831 - Surveying Aide		13.08
99832 - Surveying Technician		17.00
99840 - Vending Machine Attendant		23.38
99841 - Vending Machine Repairer		29.78
99842 - Vending Machine Repairer Helper		23.38

Note: Executive Order (EO) 13706 Establishing Paid Sick Leave for Federal Contractors applies to all contracts subject to the Service Contract Act for which the contract is awarded (and any solicitation was issued) on or after January 1 2017. If this contract is covered by the EO the contractor must provide employees with 1 hour of paid sick leave for every 30 hours they work up to 56 hours of paid sick leave each year. Employees must be permitted to use paid sick leave for their own illness injury or other health-related needs including preventive care; to assist a family member (or person who is like family to the employee) who is ill injured or has other health-related needs including preventive care; or for reasons resulting from or to assist a family member (or person who is like family to the employee) who is the victim of domestic violence sexual assault or stalking. Additional information on contractor requirements and worker protections

under the EO is available at www.dol.gov/whd/govcontracts.

ALL OCCUPATIONS LISTED ABOVE RECEIVE THE FOLLOWING BENEFITS:

HEALTH & WELFARE: $4.60 per hour up to 40 hours per week or $184.00 per week or $797.33 per month

HEALTH & WELFARE EO 13706: $4.23 per hour up to 40 hours per week or $169.20 per week or $733.20 per month*

*This rate is to be used only when compensating employees for performance on an SCA-covered contract also covered by EO 13706 Establishing Paid Sick Leave for Federal Contractors. A contractor may not receive credit toward its SCA obligations for any paid sick leave provided pursuant to EO 13706.

VACATION: 2 weeks paid vacation after 1 year of service with a contractor or successor; and 4 weeks after 3 years. Length of service includes the whole span of continuous service with the present contractor or successor wherever employed and with the predecessor contractors in the performance of similar work at the same Federal facility. (Reg. 29 CFR 4.173)

HOLIDAYS: A minimum of ten paid holidays per year: New Year's Day Martin Luther King Jr.'s Birthday Washington's Birthday Memorial Day Independence Day Labor Day Columbus Day Veterans' Day Thanksgiving Day and Christmas Day. (A contractor may substitute for any of the named holidays another day off with pay in accordance with a plan communicated to the employees involved.) (See 29 CFR 4.174)

THE OCCUPATIONS WHICH HAVE NUMBERED FOOTNOTES IN PARENTHESES RECEIVE THE FOLLOWING:

1) COMPUTER EMPLOYEES: Under the SCA at section 8(b) this wage determination does not apply to any employee who individually qualifies as a bona fide executive administrative or professional employee as defined in 29 C.F.R. Part 541. Because most Computer System Analysts and Computer Programmers who are compensated at a rate not less than $27.63 (or on a salary or fee basis at a rate not less than $455 per week) an hour would likely qualify as exempt computer professionals (29 C.F.R. 541. 400) wage rates may not be listed on this wage determination for all occupations within those job families. In addition because this wage determination may not list a wage rate for some or all occupations within those job families if the survey data indicates that the prevailing wage rate for the occupation equals or exceeds $27.63 per hour conformances may be necessary for certain nonexempt employees. For example if an individual employee is nonexempt but nevertheless performs duties within the scope of one of the Computer Systems Analyst or Computer Programmer occupations for which this wage determination does not specify an SCA wage rate then the wage rate for that employee must be conformed in accordance with the conformance procedures described in the conformance note included on this wage

determination.

Additionally because job titles vary widely and change quickly in the computer industry job titles are not determinative of the application of the computer professional exemption. Therefore the exemption applies only to computer employees who satisfy the compensation requirements and whose primary duty consists of:

(1) The application of systems analysis techniques and procedures including consulting with users to determine hardware software or system functional specifications;

(2) The design development documentation analysis creation testing or modification of computer systems or programs including prototypes based on and related to user or system design specifications;

(3) The design documentation testing creation or modification of computer programs related to machine operating systems; or

(4) A combination of the aforementioned duties the performance of which requires the same level of skills. (29 C.F.R. 541.400).

2) AIR TRAFFIC CONTROLLERS AND WEATHER OBSERVERS - NIGHT PAY & SUNDAY PAY: If you work at night as part of a regular tour of duty you will earn a night differential and receive an additional 10% of basic pay for any hours worked between 6pm and 6am. If you are a full-time employed (40 hours a week) and Sunday is part of your regularly scheduled workweek you are paid at your rate of basic pay plus a Sunday premium of 25% of your basic rate for each hour of Sunday work which is not overtime (i.e. occasional work on Sunday outside the normal tour of duty is considered overtime work).

** HAZARDOUS PAY DIFFERENTIAL **

An 8 percent differential is applicable to employees employed in a position that represents a high degree of hazard when working with or in close proximity to ordnance explosives and incendiary materials. This includes work such as screening blending dying mixing and pressing of sensitive ordnance explosives and pyrotechnic compositions such as lead azide black powder and photoflash powder. All dry-house activities involving propellants or explosives. Demilitarization modification renovation demolition and maintenance operations on sensitive ordnance explosives and incendiary materials. All operations involving re-grading and cleaning of artillery ranges.

A 4 percent differential is applicable to employees employed in a position that represents a low degree of hazard when working with or in close proximity to ordnance (or employees possibly adjacent to) explosives and incendiary materials which involves potential injury such as laceration of hands face or arms of the employee engaged in the operation irritation of the skin minor burns and the like; minimal damage to immediate or adjacent work area or equipment being used. All operations involving unloading storage and hauling of ordnance explosive and incendiary ordnance material other than small arms ammunition. These differentials are only applicable to work that has been specifically designated by the agency for ordnance explosives and incendiary material differential pay.

** UNIFORM ALLOWANCE **

If employees are required to wear uniforms in the performance of this contract (either by the terms of the Government contract by the employer by the state or local law etc.) the cost of furnishing such uniforms and maintaining (by laundering or dry cleaning) such uniforms is an expense that may not be borne by an employee where such cost reduces the hourly rate below that required by the wage determination. The Department of Labor will accept payment in accordance with the following standards as compliance:

The contractor or subcontractor is required to furnish all employees with an adequate number of uniforms without cost or to reimburse employees for the actual cost of the uniforms. In addition where uniform cleaning and maintenance is made the responsibility of the employee all contractors and subcontractors subject to this wage determination shall (in the absence of a bona fide collective bargaining agreement providing for a different amount or the furnishing of contrary affirmative proof as to the actual cost) reimburse all employees for such cleaning and maintenance at a rate of $3.35 per week (or $.67 cents per day). However in those instances where the uniforms furnished are made of ""wash and wear"" materials may be routinely washed and dried with other personal garments and do not require any special treatment such as dry cleaning daily washing or commercial laundering in order to meet the cleanliness or appearance standards set by the terms of the Government contract by the contractor by law or by the nature of the work there is no requirement that employees be reimbursed for uniform maintenance costs.

** SERVICE CONTRACT ACT DIRECTORY OF OCCUPATIONS **

The duties of employees under job titles listed are those described in the ""Service Contract Act Directory of Occupations"" Fifth Edition (Revision 1) dated September 2015 unless otherwise indicated.

** REQUEST FOR AUTHORIZATION OF ADDITIONAL CLASSIFICATION AND WAGE RATE Standard Form 1444 (SF-1444) **

Conformance Process:

The contracting officer shall require that any class of service employee which is not listed herein and which is to be employed under the contract (i.e. the work to be performed is not performed by any classification listed in the wage determination) be classified by the contractor so as to provide a reasonable relationship (i.e. appropriate level of skill comparison) between such unlisted classifications and the classifications listed in the wage determination (See 29 CFR 4.6(b)(2)(i)). Such conforming procedures shall be initiated by the contractor prior to the performance of contract work by such unlisted class(es) of employees (See 29 CFR 4.6(b)(2)(ii)). The Wage and Hour Division shall make a final determination of conformed classification wage rate and/or fringe benefits which shall be paid to all employees performing in the classification from the first day of work on which contract work is performed by them in the classification. Failure to pay such unlisted employees the compensation agreed upon by the interested

parties and/or fully determined by the Wage and Hour Division retroactive to the date such class of employees commenced contract work shall be a violation of the Act and this contract. (See 29 CFR 4.6(b)(2)(v)). When multiple wage determinations are included in a contract a separate SF-1444 should be prepared for each wage determination to which a class(es) is to be conformed.

The process for preparing a conformance request is as follows:

1) When preparing the bid the contractor identifies the need for a conformed occupation(s) and computes a proposed rate(s).

2) After contract award the contractor prepares a written report listing in order the proposed classification title(s) a Federal grade equivalency (FGE) for each proposed classification(s) job description(s) and rationale for proposed wage rate(s) including information regarding the agreement or disagreement of the authorized representative of the employees involved or where there is no authorized representative the employees themselves. This report should be submitted to the contracting officer no later than 30 days after such unlisted class(es) of employees performs any contract work.

3) The contracting officer reviews the proposed action and promptly submits a report of the action together with the agency's recommendations and pertinent information including the position of the contractor and the employees to the U.S. Department of Labor Wage and Hour Division for review (See 29 CFR 4.6(b)(2)(ii)).

4) Within 30 days of receipt the Wage and Hour Division approves modifies or disapproves the action via transmittal to the agency contracting officer or notifies the contracting officer that additional time will be required to process the request.

5) The contracting officer transmits the Wage and Hour Division's decision to the contractor.

6) Each affected employee shall be furnished by the contractor with a written copy of such determination or it shall be posted as a part of the wage determination (See 29 CFR 4.6(b)(2)(iii)).

Information required by the Regulations must be submitted on SF-1444 or bond paper.

When preparing a conformance request the ""Service Contract Act Directory of Occupations"" should be used to compare job definitions to ensure that duties requested are not performed by a classification already listed in the wage determination. Remember it is not the job title but the required tasks that determine whether a class is included in an established wage determination. Conformances may not be used to artificially split combine or subdivide classifications listed in the wage determination (See 29 CFR 4.152(c)(1))."

UNIVERSITY OF GUAM
UNIBETSEDÅT GUÅHAN

EXHIBIT A

University of Guam

BID SPECIFICATIONS OR EQUIVALENT

BID NO. B21-17

JR0529 UOG HVAC EQUIPMENT PURCHASE

4/27/2021

Prepared by:

AMORIENT

Prepared for:

UNIVERSITY OF GUAM

SECTION 23 81 00
DECENTRALIZED UNITARY HVAC EQUIPMENT

PART 1

GENERAL

1.1 REFERENCES

The publications listed below form a part of this specification to the extent referenced. The publications are referred to within the text by the basic designation only.

AIR MOVEMENT AND CONTROL ASSOCIATION INTERNATIONAL, INC. (AMCA)

AMCA 500-D	(2018) Laboratory Methods of Testing Dampers for Rating
AMCA 500-L	(2015) Laboratory Methods of Testing Louvers for Rating

AIR-CONDITIONING, HEATING AND REFRIGERATION INSTITUTE (AHRI)

AHRI 540	(2020) Performance Rating Of Positive Displacement Refrigerant Compressors And Compressor Units
AHRI 700	(2019) Specifications for Fluorocarbon Refrigerants
ANSI/AHRI 210/240	(2008; Add 1 2011; Add 2 2012) Performance Rating of Unitary Air-Conditioning & Air-Source Heat Pump Equipment
ANSI/AHRI 270	(2020) Sound Rating of Outdoor Unitary Equipment
ANSI/AHRI 460	(2005) Performance Rating of Remote Mechanical-Draft Air-Cooled Refrigerant Condensers

AMERICAN SOCIETY OF HEATING, REFRIGERATING AND AIR-CONDITIONING ENGINEERS (ASHRAE)

ANSI/ASHRAE 15 & 34	(2013) ANSI/ASHRAE Standard 15 Safety Standard for refrigeration systems and ANSI/ASHRAE Standard 34-Designtion and Safety Classification of Refrigerants
ASHRAE 15 & 34	(2013) ASHRAE Standard 34-2016 Safety Standard for Refrigeration Systems/ASHRAE Standard 34-2016 Designation and Safety Classification of Refrigerants-ASHRAE Standard 34-2016
ASHRAE 52.2	(2012) Method of Testing General Ventilation Air-Cleaning Devices for Removal Efficiency by Particle Size
ASHRAE 55	(2020) Thermal Environmental Conditions for Human Occupancy
ASHRAE 62.1	(2019) Ventilation for Acceptable Indoor Air Quality

ASHRAE 64	(2020) Methods of Testing Remote Mechanical-Draft Evaporative Refrigerant Condensers
ASHRAE 90.1 - IP	(2019) Energy Standard for Buildings Except Low-Rise Residential Buildings
ASHRAE 90.1 - SI	(2019) Energy Standard for Buildings Except Low-Rise Residential Buildings

ASTM INTERNATIONAL (ASTM)

ASTM A307	(2021; E 2017) Standard Specification for Carbon Steel Bolts, Studs, andThreaded Rod 60 000 PSI Tensile Strength
ASTM B117	(2019) Standard Practice for Operating Salt Spray (Fog) Apparatus
ASTM C1071	(2019) Standard Specification for Fibrous Glass Duct Lining Insulation (Thermal and Sound Absorbing Material)
ASTM D520	(2000; R 2011) Zinc Dust Pigment
ASTM E84	(2021) Standard Test Method for Surface Burning Characteristics of Building Materials
ASTM F104	(2011; R 2020) Standard Classification System for onmetallic Gasket Materials

NATIONAL ELECTRICAL MANUFACTURERS ASSOCIATION (NEMA)

NEMA ICS 6	(1993; R 2016) Industrial Control and Systems:Enclosures
NEMA MG 1	(2018) Motors and Generators
NEMA MG 2	(2014) Safety Standard for Construction and Guide for Selection, Installation and Use of Electric Motors and Generators

NATIONAL FIRE PROTECTION ASSOCIATION (NFPA)

NFPA 70	(2020; ERTA 20-1 2020; ERTA 20-2 2020; TIA20-1; TIA 20-2; TIA 20-3; TIA 20-4) National Electrical Code

UNDERWRITERS LABORATORIES (UL)

UL 586	(2009; Reprint Dec 2017) UL Standard for Safety High-Efficiency Particulate, Air Filter Units
UL 900	(2015) Standard for Air Filter Units
UL 1995	(2015) UL Standard for Safety Heating and Cooling Equipment

1.2 SUBMITTALS

SD-03 Product Data Spare Parts

Posted Instructions

Coil Corrosion Protection System Performance Tests Training

Inventory

Environmental Data

Supplied Products

SD-06 Test Reports

Refrigerant Tests, Charging, and Start-Up

System Performance Tests

SD-07 Certificates Service

Organizations

SD-10 Operation and Maintenance Data

Operation and Maintenance Manuals

1.3 DELIVERY, STORAGE, AND HANDLING

Protect stored items from the weather, humidity and temperature variations, dirt and dust, or other contaminants. Properly protect and care for all material both before and during installation. Submit an inventory of all the stored items. Replace any materials found to be damaged, at no additional cost to the Government. During installation, cap piping and similar openings capped to keep out dirt and other foreign matter.

1.4 ENVIRONMENTAL REQUIREMENTS

For proper Indoor Environmental Quality, maintain pressure within the building as indicated. Ventilation mustmeet or exceed ASHRAE 62.1 and all published addenda. Meet or exceed filter media efficiency as tested in accordance with ASHRAE 52.2. Thermal comfort must meet or exceed ASHRAE 55.

1.5 WARRANTY

Provide equipment with the 1 year manufacturer's warranty

PART 2 PRODUCTS

2.1 MATERIALS

Provide Manufacturer's standard catalog data, at least 5 weeks prior to the purchase or installation of a particular component, highlighted to show material, size, options, performance charts and curves, etc. in adequate detail to demonstrate compliance with contract requirements. Data includes manufacturer's recommended installation instructions and procedures. If vibration isolation is specified for a unit, include vibration isolator literature

containing catalog cuts and certification that the isolation characteristics of the isolators provided meet the manufacturer's recommendations. Submit data for each specified component. Minimum efficiency requirementsmust be in accordance with ASHRAE 90.1.

2.1.1 Standard Products

Provide materials and equipment that are standard products of a manufacturer regularly engaged in the manufacturing of such products, which are of a similar material, design and workmanship. The standard productsmust have been in satisfactory commercial or industrial use for 2 years prior to bid opening. The 2 year use includes applications of equipment and materials under similar circumstances and of similar size. The 2 years' experience must be satisfactorily completed by a product which has been sold or is offered for sale on the commercial market through advertisements, manufacturer's catalogs, or brochures. Products having less than a 2 year field service record will be acceptable if a certified record of satisfactory field operation, for not less than 6000 hours exclusive of the manufacturer's factory tests, can be shown. Products must be supported by a service organization. Ensure system components are environmentally suitable for the indicated geographic locations.

2.1.2 Product Sustainability Criteria

2.1.2.1 Energy Efficient Equipment

Provide equipment meeting the minimum efficiency requirement as required by ASHRAI 90.1.

2.1.2.2 Electrical Equipment / Motors

Electrical motor driven equipment specified must be provided complete with motors, motor starters, and controls. Electrical characteristics must be as shown, and unless otherwise indicated, all motors of 1 horsepower and above with open, drip proof, totally enclosed, or explosion proof fan cooled enclosures, must be the premium efficiency type in accordance with NEMA MG 1. Field wiring must be in accordance with manufacturer's instructions. Each motor must conform to NEMA MG 1 and NEMA MG 2 and be of sufficient size to drive the equipment at the specified capacity without exceeding the nameplate rating of the motor. Motors must be continuous duty with theenclosure specified. Motor starters must be provided complete with thermal overload protection and other appurtenances necessary for the motor control indicated. Motors must be furnished with a magnetic across-the- line or reduced voltage type starter as required by the manufacturer. Motor duty requirements must allow for maximum frequency start-stop operation and minimum encountered interval between start and stop. Motors must be sized for the applicable loads. Motor torque must be capable of accelerating the connected load within 20 seconds with 80 percent of the rated voltage maintained at motor terminals during one starting period. Motor bearings must be fitted with grease supply fittings and grease relief to outside of enclosure. Manual or automatic control and protective or signal devices required for the operation specified and any control wiring required for controls and devices specified, but not shown, must be provided.

2.1.2.3 Ozone Depleting Substances

Unitary air conditioning equipment must not use CFC-based refrigerants. Refrigerant shall be R-410A or may be an approved alternative refrigerant in accordance with EPA's Significant New Alternative Policy (SNAP) listing.

2.1.3 Nameplates

Major equipment including compressors, condensers, receivers, heat exchanges, fans, and motors must have the manufacturer's name, address, type or style, model or serial number, and catalog number on a plate secured to the item of equipment. Plates must be durable and legible throughout equipment life and made of stainless steel. Fix plates in prominent locations with nonferrous screws or bolts.

2.1.4 Safety Devices

Exposed moving parts, parts that produce high operating temperature, parts which may be electrically energized, and parts that may be a hazard to operating personnel must be insulated, fully enclosed, guarded, or fitted with other types of safety devices. Safety devices must be installed so that proper operation of equipment is not impaired. Welding and cutting safety requirements must be in accordance with AWS Z49.1.

2.2 EQUIPMENT

2.2.1 Large-Capacity Split-System Air Conditioners (Greater Than 65,000 Btu/h)

Provide an air-cooled, split system which employs a remote condensing unit, a separate indoor unit, and interconnecting refrigerant piping. Provide the air conditioning type unit conforming to applicable Underwriters Laboratories (UL) standards including UL 1995. Unit must be rated in accordance with ANSI/AHRI 210/240. Provide unit with necessary fans, air filters, and cabinet construction as specified in paragraph UNITARY EQUIPMENT ACCESSORIES. Provide double-width, double inlet, forward curved centrifugal scroll type evaporator or supply fans. Provide the manufacturer's standard for the unit specified and may be centrifugal scroll type condenser or outdoor fans. Enclose fan condenser motors in totally enclosed enclosures and permanently lubricate ball bearings. Air Conditioners must have a minimum energy efficiency ratio (EER) of 12.

2.2.1.1 Air-To-Refrigerant Coil

Provide coils with copper tubes of 3/8 inch minimum diameter with copper fins that are mechanically bonded or soldered to the tubes. Provide casing of galvanized steel. Avoid contact of dissimilar metals. Test coils in accordance with ASHRAE 15 & 34 at the factory and ensure suitability for the working pressure of the installed system. Dehydrate and seal each coil testing and prior to evaluation and charging. Provide each unit with a factory operating charge of refrigerant and oil. Field charge unit shipped with a holding charge with refrigerant and oil. Provide separate expansion devices for each compressor circuit. Condenser coil must have special coating for corrosion resistance. Condenser coil must be copper finned. Coat condenser and evaporator coil with a uniformly applied epoxy electrodeposition, phenolic, or vinyl type coating to all coil surface areas without material bridging between fins. Apply coating at either the coil or coating manufacturer's factory. Coating process must ensure complete coil encapsulation and be capable of withstanding a minimum 1,000 hours exposure to the salt spray test specified in ASTM B117 using a 5 percent sodium chloride solution.

2.2.1.2 Refrigeration Circuit

Refrigerant-containing components must comply with ASHRAE 15 & 34 and be factory tested, cleaned, dehydrated, charged, and sealed. Provide refrigerant charging valves and connections, and pumpdown valves foreach circuit.

2.2.1.3 Unit Controls

Provide unit internally prewired with a 208 volt control circuit powered by an internal transformer.

Provide terminal blocks for power wiring and external control wiring. Unit must have cutoffs high and low pressure, andlow oil pressure for compressors with positive displacement oil pumps, supply fan failure, and safety interlocks on all service panels. Stage multiple compressors by means of a time delay. Internally protect unit by a circuit breaker in accordance with UL 1995.

2.2.1.4 Condensing Unit

Fit each remote condenser coil with a manual isolation valve and an access valve on the coil side. Saturated refrigerant condensing temperature must not exceed 120 degrees F at 95 degrees F ambient. Fan and condensermotors must have totally enclosed enclosures.

2.2.1.4.1 Air-Cooled Condenser

Provide unit rated in accordance with ANSI/AHRI 460 and conform to the requirements of UL 1995. Provide factoryfabricated, tested, packaged, and self-contained unit. Unit must be complete with casing, propeller or centrifugal type fans, heat rejection coils, connecting piping and wiring, and all necessary appurtenances.

a. Provide interconnecting refrigeration piping, electrical power, and control wiring between thecondensing unit and the indoor unit as required and as indicated. Provide electrical and refrigeration piping terminal connections between condensing unit and evaporator units.

b. Low ambient control for multi-circuited units serving more than one evaporator coil must provide independent condenser pressure controls for each refrigerant circuit. Set controls to produce a minimum of 95 degrees F saturated refrigerant condensing temperature. Provide unitwith a liquid subcooling circuit that ensures proper liquid refrigerant flow to the expansion device over the specified application range of the condenser. Unit must be provided with manufacturer's standard liquid subcooling. Liquid seal the subcooling circuit.

c. Coils must have copper tubes of 3/8 inch minimum diameter with copper fins that are mechanically bonded or soldered to the tubes. Protect coil in accordance with paragraph COIL CORROSION PROTECTION. Casing must be galvanized steel or aluminum. Avoid contact of dissimilar metals. Test coils in accordance with ASHRAE 15 & 34 at the factory and ensure suitability for the working pressure of the installed system. Dehydrate and seal each coil after testing and prior to evaluation and charging. Provide each unit with a factory operating charge ofrefrigerant and oil or a holding charge. Field charge unit shipped with a holding charge. Provide separate expansion devices for each compressor circuit.

d. Provide a complete control system with required accessories for regulating condenser pressure by fan cycling, solid-state variable fan speed, modulating condenser coil or fan dampers, floodingthe condenser, or a combination of the above. Construct unit mounted control panels or enclosures in accordance with applicable requirements of NFPA 70 and house in NEMA ICS 6, Class 1 or 3A enclosures. Controls must include overload protective devices, interface with local and remote components, and intercomponent wiring to terminal block points.

2.2.1.4.2 Compressors

Provide compressor rated in accordance with AHRI 540. Provide direct drive, semi-hermetic or hermetic reciprocating, or scroll type compressor capable of operating at partial load conditions. Compressor must be capable of continuous operation down to the lowest step of unloading as specified. Provide units 120,000 Btuh and larger with capacity reduction devices to produce automatic capacity reduction of at least 50 percent. If standard with the manufacturer, two or more compressors may be used in lieu of a single compressor with unloading capabilities, in which case the compressors operate in sequence, and each compressor must have an independent refrigeration circuit through the condenser and evaporator. Each compressor must start in the unloaded position. Provide each compressor with vibration isolators, crankcase heater, lubrication pump, thermal overloads, and high and low pressure safety cutoffs and protection against short cycling.

2.2.1.5 Filters

Provide filters of the sectional or panel type, capable of filtering the entire air supply. Mount filter(s) integral within the unit and make accessible by hinged access panel(s). Factory supply 2.0 inch, MERV 13, throwaway filters. Filters must have an average dust spot efficiency of 90-95 percent and an average arrestance of 90 percentwhen tested in accordance with ASHRAE 52.2. Provide UL Class 1 filters.

2.4 COMPONENTS

2.4.1 Refrigerant and Oil

The air-conditioning system shall use R410A. Refrigerants must have number designations and safety classifications in accordance with ASHRAE 15 & 34. Refrigerants must meet the requirements of AHRI 700 as a minimum. Provide a complete charge of refrigerant for the installed system as recommended by the manufacturer.Lubricating oil must be of a type and grade recommended by the manufacturer for each compressor. Where color leak indicator dye is incorporated, charge must be in accordance with manufacturer's recommendation.

2.4.2 Fans

Fan wheel shafts must be supported by either maintenance-accessible lubricated antifriction block-type bearings, or permanently lubricated ball bearings. Unit fans must be selected to produce the cfm required at the fan total pressure. Motor starters, if applicable, must be magnetic across-the-line type with a totally enclosed enclosure. Thermal overload protection must be of the manual or automatic-reset type. Fan wheels or propellers must be constructed of aluminum or galvanized steel. Centrifugal fan wheel housings must be of galvanized steel, and both centrifugal and propeller fan casings must be constructed of aluminum or galvanized steel. Steel elements of fans, except fan shafts, must be hot-dipped galvanized after fabrication or fabricated of mill galvanized steel. Mill- galvanized steel surfaces and edges damaged or cut during fabrication by forming, punching, drilling, welding, or cutting must be recoated with an approved zinc-rich compound. Fan wheels or propellers must be statically and dynamically balanced. Centrifugal scroll-type fans must be provided with streamlined orifice inlet and V-belt drive. Each drive will be independent of any other drive. Propeller fans must be V-belt drive type with fixed pitch blades. V-belt driven fans must be mounted on a corrosion protected drive shaft supported by either maintenance-accessible lubricated antifriction block-type bearings, or permanently lubricated ball bearings. Each drive will be independent of any other drive. Drive bearings must be protected with water slingers or shields. V-belt drives mustbe fitted with guards where exposed to contact by personnel and fixed pitch sheaves.

2.4.3 Air Filters

Provide filters to filter outside air and return air and locate inside combination air filter mixing box. Provide replaceable (throw-away) high efficiency type. Filters must conform to UL 900, Class 1. Polyurethane filters cannot be used on units with multiframe filters. Air filters must be listed in accordance with requirements ofUL 900, except high efficiency particulate air filters of 99.97 percent efficiency by the DOP Test Method mustbe as listed under the label service and must meet the

requirements of UL 586.

2.4.3.1 High Efficiency Filters

Additional high efficiency particulate air (HEPA) filters shall be provided. Filters must have a MERV of 17 when tested in accordance with ASHRAE 52.2. Filter assembly must include; holding frame and fastener assembly, filter cartridge, mounting frame, and retainer assembly. Reinforce filter media with glass fiber mat. Pressure drop across

clean filter shall not exceed 1 inches of water gage.

2.4.5 Mixing Boxes

Mixing boxes must match the base unit in physical size and must include equally sized openings, each capable offull air flow. Arrangement must be as indicated.

2.4.6 Cabinet Construction

Casings for the specified unitary equipment must be constructed of galvanized steel with a weather and corrosion resistant enamel finish or aluminum sheet metal and galvanized or aluminum structural members. If cabinet is enamel-finished galvanized steel, the cabinet finish shall be tested in accordance with ASTM B-117 salt spray surface scratch test (SST) procedure for a minimum of 1000 hours. Such documentation shall be included in all submittals. Minimum thickness of single wall exterior surfaces must be 18 gauge galvanized steel or 0.071 inch thick aluminum on units with a capacity above 20 tons and 20 gauge galvanized steel or 0.064 inch thick aluminum on units with a capacity less than 20 tons. Casing must be fitted with lifting provisions, access panels or doors, fan vibration isolators, electrical control panel, corrosion-resistant components, structural support members, insulatedcondensate drip pan and drain, and internal insulation in the cold section of the casing. Where double-wall insulated construction is proposed, minimum exterior galvanized sheet metal thickness must be 20 gauge.
Provisions to permit replacement of major unit components must be incorporated. Penetrations of cabinet surfaces, including the floor, must be sealed. Unit must be fitted with a drain pan which extends under all areas where water may accumulate. Drain pan must be fabricated from Type 300 stainless steel, galvanized steel with protective coating as required, or an approved plastic material. Pan insulation must be water impervious. Extent and effectiveness of the insulation of unit air containment surfaces must prevent, within limits of the specified insulation, heat transfer between the unit exterior and ambient air, heat transfer between the two conditioned airstreams, and condensation on surfaces. Insulation must conform to ASTM C1071.

2.4.6.1 Indoor Cabinet

Indoor cabinets must be suitable for the specified indoor service and enclose all unit components.

2.4.6.2 Outdoor Cabinet

Outdoor cabinets must be suitable for outdoor service with a weathertight, insulated and corrosion-protected structure. Cabinets constructed exclusively for indoor service which have been modified for outdoor service arenot acceptable.

2.6 FINISHES

2.6.1 Coil Corrosion Protection

Provide coil with a uniformly applied epoxy electrodeposition, phenolic, or vinyl type coating to all coil surfaceareas without material bridging between fins. Submit product data on the type coating selected,

the coating thickness, the application process used, the estimated heat transfer loss of the coil, and verification of conformance with the salt spray test requirement. Coating must be applied at either the coil or coating manufacturer's factory. Coating process must ensure complete coil encapsulation. Coating must be capable ofwithstanding a minimum 1,000 hours exposure to the salt spray test specified in ASTM B117 using a 5 percentsodium chloride solution.

2.6.2 Equipment and Components Factory Coating

Unless otherwise specified, equipment and component items, when fabricated from ferrous metal, must be factory finished with the manufacturer's standard finish, except that items located outside of buildings must haveweather resistant finishes that will withstand 500 hours exposure to the salt spray test specified in ASTM B117 using a 5 percent sodium chloride solution. Immediately after completion of the test, the specimen must show no signs of blistering, wrinkling, cracking, or loss of adhesion and no sign of rust creepage beyond 1/8 inch on either side of the scratch mark. Cut edges of galvanized surfaces where hot-dip galvanized sheet steel is used must be coated with a zinc-rich coating conforming to ASTM D520, Type I.
Where stipulated in equipment specifications of this section, coat finned tube coils of the affected equipment as specified below. Apply coating at the premises of a company specializing in such work. Degrease and prepare for coating in accordance with the coating applicator's procedures for the type of metals involved. Completed coatingmust show no evidence of softening, blistering, cracking, crazing, flaking, loss of adhesion, or "bridging" between the fins.

2.6.2.1 Phenolic Coating

Provide a resin base thermosetting phenolic coating. Apply coating by immersion dipping of the entire coil. Providea minimum of two coats. Bake or heat dry coils following immersions. After final immersion and prior to final baking, spray entire coil with particular emphasis given to building up coating on sheared edges. Total dry film thickness must be 2.5 to 3.0 mils.

2.6.2.2 Chemical Conversion Coating with Polyelastomer Finish Coat

Dip coils in a chemical conversion solution to molecularly deposit a corrosion resistant coating by electrolysis action. Cure conversion coating at a temperature of 110 to 140 degrees F for a minimum of 3 hours. Coat coil surfaces with a complex polymer primer with a dry film thickness of 1 mil. Cure primer coat for a minimum of 1hour. Using dip tank method, provide three coats of a complex polyelastomer finish coat. After each of the firsttwo finish coats, cure the coils for 1 hour. Following the third coat, spray a fog coat of an inert sealer on the coilsurfaces. Total dry film thickness must be 2.5 to 3.0 mils. Cure finish coat for a minimum of 3 hours. Coating materials must have 300 percent flexibility, operate in temperatures of minus 50 to plus 220 degrees F, and protect against atmospheres of a pH range of 1 to 14.

2.6.2.3 Vinyl Coating

Apply coating using an airless fog nozzle. For each coat, make at least two passes with the nozzle. Materials to be applied are as follows:

a. Total dry film thickness, 6.5 mils maximum

b. Vinyl Primer, 24 percent solids by volume: One coat 2 mils thick

c. Vinyl Copolymer, 30 percent solids by volume: One coat 4.5 mils thick

2.6.3 Factory Applied Insulation

Refrigeration equipment must be provided with factory installed insulation on surfaces subject to sweating including the suction line piping. Where motors are the gas-cooled type, factory installed insulation must be provided on the cold-gas inlet connection to the motor in accordance with manufacturer's standard practice. Factory insulated items installed outdoors are not required to be fire-rated. As a minimum, factory insulated items installed indoors must have a flame spread index no higher than 75 and a smoke developed index no higherthan 150. Factory insulated items (no jacket) installed indoors and which are located in air plenums, in ceiling spaces, and in attic spaces must have a flame spread index no higher than 25 and a smoke developed index no higher than 50. Flame spread and smoke developed indexes must be determined by ASTM E84.
Insulation must be tested in the same density and installed thickness as the material to be used in the actualconstruction. Material supplied by a manufacturer with a jacket must be tested as a composite material.
Jackets, facings, and adhesives must have a flame spread index no higher than 25 and a smoke developed index no higher than 50 when tested in accordance with ASTM E84.

2.7 TESTS, INSPECTIONS, AND VERIFICATIONS

All manufactured units must be inspected and tested, and documentation provided to demonstrate that each unit is in compliance with ANSI/AHRI and UL requirements and that the minimum efficiency requirements of ASHRAE 90.1 - IP have been met.

DIVISION23-HEATING,VENTILATING,ANDAIRCONDITIONING(HVAC)

(HVAC) SECTION 23 81 29 VARIABLE REFRIGERANTFLOWHVACSYSTEMS

PART 1 GENERAL

1.1 SUMMARY

Provide a complete Air Source, Cooling Only type Variable Refrigerant Flow (VRF) System consisting of one or moreoutdoor compressor units and multiple indoor fan coil units as specified in this Section and in accordance with the following:

a. The complete system must be a tested combination in accordance with AHRI 1230.

b. Provide cooling only control for each zone

c. For systems which simultaneously heat and cool, the outdoor units must be interconnected to the indoor units through branch selector boxes in accordance with the manufacturer's engineering data detailing each indoor unit. The indoor units and outdoor must be connected tothe branch selector boxes utilizing the manufacturer's specified piping joints and headers.

1.2 REFERENCES

The publications listed below form a part of this specification to the extent referenced. The publications are referred to within the text by the basic designation only.

AIR-CONDITIONING, HEATING AND REFRIGERATION INSTITUTE (AHRI)

AHRI 1230	(2010; Addendum 1 2011; Addendum 2 2014) Performance Rating of Variable Refrigerant Flow (VRF) Multi-Split Air-Conditioning and HeatPump Equipment
ANSI/AHRI 270	(2008) Sound Rating of Outdoor Unitary Equipment
ANSI/AHRI 760	(2007) Performance Rating of Solenoid Valves for Use With VolatileRefrigerants

AMERICAN SOCIETY OF HEATING, REFRIGERATING AND AIR-CONDITIONING ENGINEERS (ASHRAE)

ANSI/ASHRAE 15 & 34	(2013) ANSI/ASHRAE Standard 15-Safety Standard for Refrigeration Systems and ANSI/ASHRAE Standard 34-Designation and SafetyClassification of Refrigerants
ASHRAE 90.1 - IP	(2013) Energy Standard for Buildings Except Low-Rise ResidentialBuildings

ASTM INTERNATIONAL (ASTM)

ASTM A307 (2014; E 2017) Standard Specification for Carbon Steel Bolts, Studs, and

	Threaded Rod 60 000 PSI Tensile Strength
ASTM B117	(2019) Standard Practice for Operating Salt Spray (Fog) Apparatus
ASTM D520	(2000; R 2011) Zinc Dust Pigment
ASTM E84	(2020) Standard Test Method for Surface Burning Characteristics ofBuilding Materials
ASTM F104	(2011; R 2020) Standard Classification System for Nonmetallic GasketMaterials

NATIONAL ELECTRICAL MANUFACTURERS ASSOCIATION (NEMA)

NEMA 250	(2018) Enclosures for Electrical Equipment (1000 Volts Maximum)
NEMA MG 1	(2018) Motors and Generators
NEMA MG 2	(2014) Safety Standard for Construction and Guide for Selection, Installation and Use of Electric Motors and Generators

U.S. DEPARTMENT OF ENERGY (DOE)

Energy Star	(1992; R 2006) Energy Star Energy Efficiency Labeling System (FEMP)

U.S. NATIONAL ARCHIVES AND RECORDS ADMINISTRATION (NARA)

40 CFR 82	Protection of Stratospheric

Ozone UNDERWRITERS

LABORATORIES (UL)

UL 207	(2009; Reprint Jan 2020) Refrigerant-Containing Components and Accessories, Nonelectrical
UL 429	(2013; Reprint Jan 2020) Electrically Operated Valves
UL 586	(2009; Reprint Dec 2017) UL Standard for Safety High-EfficiencyParticulate, Air Filter Units
UL 900	(2015) Standard for Air Filter Units
UL 1995	(2015) UL Standard for Safety Heating and Cooling Equipment

1.3 SUBMITTALS

SD-01 Preconstruction Submittals

Verification Of Existing

Conditions

SD-02 Shop Drawings

VRF System Contractor Design

Drawings SD-03 Product Data

Spare Parts Data

Coil Corrosion Protection

Manufacturer's Standard Catalog

DataSample Warranty

Refrigerant SDS

SheetsSD-05 Design Data

Manufacturer's Engineering

DataSD-06 Test Reports

System Performance

TestsSD-07 Certificates

Service

Organizations

Warranty

Electronic Refrigerant Leak Detector Calibration

Ozone Depleting Substances Technician

Certification

SD-08 Manufacturer's Instructions Manufacturer's

InstructionsSD-09 Manufacturer's Field Reports

Refrigerant Charging

1.4 QUALITY ASSURANCE

Complete VRF systems must be purchased from a single supplier. The VRF system supplier must be responsible for providing a fully functional VRF system.

Prior to purchase of equipment, shop drawings (e.g. equipment layout, plans and elevations, refrigerant piping system plans, etc.) must be approved by the VRF manufacturers representative. Include approval with name andcontact information of VRF manufacturer's representative in the submittal.

1.5 QUALITY CONTROL

1.5.1 Standard Products

Provide materials and equipment that are standard products of a manufacturer regularly engaged in the manufacturing of such products, which are of a similar material, design and workmanship. The standard products must have been in satisfactory commercial or industrial use for 3 years immediately prior to the solicitation of this contract. The 3 year use includes applications of equipment and materials under similar circumstances and of similar size. The 3 years' experience must be satisfactorily completed by a product which has been sold on the commercial market through advertisements, manufacturer's catalogs, or brochures. Products must be supported by a service organization. Ensure system components are environmentally suitable for the indicated geographic locations.

1.5.2 Manufacturer's Engineering Data

Submit VRF manufacturer's engineering data with the shop drawings under separate cover. Strike outirrelevant items and options not to be installed. Provide all input and output reports for all selection procedures required by the manufacturer and as required by this section. Engineering data must include:

a. Selection Procedures:
   1. Indoor and Outdoor Units
   2. Branch Selector Units
   3. Piping Material and Fittings
   4. Refrigerant Mass for system
   5. Refrigerant Classification

b. System Efficiency Curves/Data including:
   1. Efficiency correlated with OAT
   2. At least five (5) data points covering full range of operation
   3. Minimum and maximum values over the operational range
   4. Efficiency at Standard AHRI conditions.

1.5.3 Manufacturer's Instructions

Submit VRF manufacturer's instructions with the shop drawings under separate cover. Strike outirrelevant items and options not to be installed. Provide with the following:

a. Installation: Include mechanical, electrical, controls and piping complete installation requirements.
b. Operation: Include startup, normal operation and shutdown procedures.
c. Maintenance: Include preventative.

1.6 DELIVERY, STORAGE, AND HANDLING

Protect stored items from the weather, humidity and temperature variations, dirt and dust, or other contaminants. Properly protect and care for all material both before and during installation. Submit an inventoryof all the stored items. Replace any materials found to be damaged, at no additional cost to the Government.
During installation, keep piping and similar openings capped to keep out dirt and other foreign matter.

1.7 WARRANTY

Provide VRF manufactured equipment with the Manufacturer's Standard Warranty in addition to the Warranty of Construction. Submit Sample Warranty prior to construction. Compare warranty requirements with the requirements of this contract and identify discrepancies in the submittal that would prevent coverage of warrantyby the manufacturer.

PART 2 PRODUCTS

All products used to meet this specification must meet the indicated requirements, but not all products specified here will be required by every project.

2.1 MATERIALS

Provide Manufacturer's standard catalog data, at least 5 weeks prior to the purchase or installation of a particular component, highlighted to show material, size, options, performance charts and curves, in adequate detail to demonstrate compliance with contract requirements. If field installed vibration isolation is specified for a unit, include vibration isolator literature containing catalog cuts and certification that the isolation characteristics of theisolators provided meet the manufacturer's recommendations. Submit data for each specified component.
Minimum efficiency requirements must be in accordance with ASHRAE 90.1 - IP.

2.1.1 Performance Requirements

Provide energy efficiency curve and data of EFFICIENCY vs. OAT. **Provide at least five data points over the** full range of operation capturing the minimums and **maximums.**

2.1.1.1 Variable Refrigerant Flow Multi-Split Air Conditioners

Information on Energy Star requirements can be found **at** https://www.energystar.gov/products/heating cooling/light commercial heating cooling/light commercial **hvac key product criteria**

2.1.1.2 Electrical Equipment / Motors

Electrical motor driven equipment specified must be provided complete with motors, motor starters, and controls. Electrical characteristics must be as shown, and unless otherwise indicated and field wiring must be in accordance with manufacturer's instructions. All motor(s):

a. 1 horsepower and above must be the premium efficiency type in accordance with NEMA MG 1.

b. Conform to NEMA MG 1 and NEMA MG 2 and be of sufficient size to drive the equipment at thespecified capacity without exceeding the nameplate rating.

c. Continuous duty with the enclosure specified.

d. Starters must be provided complete with thermal overload protection and other appurtenancesnecessary for the motor control indicated.

e. Furnished with a magnetic across-the-line or reduced voltage type starter as required by themanufacturer.

f. Duty requirements must allow for maximum frequency start-stop operation and minimumencountered interval between start and stop.

g. Must be sized for all applicable loads.

h. Bearings with grease supply fittings must have grease relief to outside of enclosure.

i. Automatic control and protective or signal devices required for the operation specified and anycontrol wiring required for controls and devices specified, but not shown, must be provided.

2.1.1.3 Refrigerant

The air-conditioning system shall use R410A.

2.1.2 Safety Devices

Exposed moving parts, parts that produce high operating temperature, parts which may be electrically energized,and parts that may be a hazard to operating personnel must be insulated, fully enclosed, guarded, or fitted with other types of safety devices.

2.2.1 Zone Control

Provide a Space Sensor Module for each fan coil unit unless otherwise indicated in contract drawings and withthe following additional requirements:

a. Displays the current temperature, temperature setpoint, fans status, occupancy status andconditioning mode at the same time. If information is displayed electronically then it must be illuminated.

b. Temperature setpoint adjustment in one degree increments.

c. Fans speed control (At least: High-low-Auto).

d. Occupancy override button which changes the mode of the zone to occupied for one hour perpress of occupancy override button with 8 hours maximum at any instance.

2.3 INDOOR FAN COIL

UNITSProvide with the

following:

a. Factory complete, tested and pre-wired with all necessary electronic and refrigerantcontrols.

b. Equipped with auto-restart function and test run capability either via a switch or controller.

c. Refrigerant: Refrigerant circuits factory-charged with dehydrated inert gas.

d. Coils: Direct expansion type constructed from copper, aluminum, or copper and aluminum.

e. Fans: Direct-drive, with statically and dynamically balanced impellers; variable speed ECM unlessotherwise indicated; motor thermally protected.

f. Return Air Filter: Washable long-life net filter with mildew proof resin, or replaceable, unlessotherwise indicated.

g. Condensate Drainage: Built-in condensate drain pan with drain connection.

h. Dedicated electronic modulating refrigerant expansion and flow control.

i. Unit must be in accordance with UL 1995 and AHRI 1230.

j. For units with Built-In Condensate Pumps, provide condensate safety shutoff and alarm. For units without Built-In Condensate Pump, provide built in or field supplied overflow protection.

2.3.1 Concealed-In-Ceiling

Units Provide with the following:

a. Ducted horizontal discharge and return; galvanized steel cabinet in accordance with Section 23 30 00 HVAC AIR DISTRIBUTION.

b. Field adjustable external static pressure switch for high efficiency filter operation.

c. Switch box accessible from side or bottom.

2.3.2 Recessed Ceiling

Units Provide with the

following:

a. Four-way airflow cassette with central return air grille, for installation in a fixed ceiling, unless otherwise indicated.

b. Exposed Housing: White, impact resistant, with washable decoration panel.

c. Supply Airflow Adjustment:

(1) Via motorized louvers which can be horizontally and vertically adjusted from 0 to90 degrees.

(2) Field-modifiable to 3-way and 2-way airflow.

2.3.3 Wall Surface-Mounted

Units Provide with the following:

a. Finished white casing, with removable front grille; sound insulation; wall mounting plate; condensate drain pan.

b. Airflow Control: Auto-swing louver that closes automatically when unit stops; adjustable discharge angle, set using remote controller; upon restart, discharge angle defaulting to sameangle as previous operation.

c. Fan: Direct-drive cross-flow type.

d. Condensate Drain Connection: Side (end), not concealed in wall.

2.4 **OUTDOOR** COMPRESSOR

UNITProvide with the

following:

a. The outdoor unit must have one or more variable capacity compressors or alternative method resulting in three or more steps of capacity needed to load match the indoor unit fan coils at alltimes.

b. The unit must be factory complete, tested and pre-wired with all necessary electronic andrefrigerant controls.

c. The sound pressure dB(A) at rated conditions must be a value of 58 decibels at 3 feet from thefront of the unit when rated in accordance with ANSI/AHRI 270.

d. The unit must automatically restart normal operation after a power failure of any durationwithout reprogramming or manual assistance.

e. Oil recovery cycle must be automatic occurring a minimum of 2 hours after start of operationand then at least every 8 hours of operation.

f. Each outdoor unit must have it's own dedicated power feed, each with disconnect and mainpower circuit breaker.

g. The unit must be in compliance with ANSI/ASHRAE 15 & 34, factory tested, cleaned, dehydrated, charged, and sealed. Provide refrigerant charging valves.Filter-drier must beprovided in liquid line.

h. The outdoor units capacity must meet or exceed the scheduled value in the contract drawings.The ratio of the outdoor unit capacity to the total connected indoor capacity must bein accordance with the manufacturer's recommendations for selecting the outdoor unit.

i. Unit must be in accordance with UL 1995 and AHRI 1230.

2.4.1 Air-Cooled

The unit must must have full design cooling capacity at 95 degrees F dry bulb ambient.

2.4.2 Casing

Construct the unit of zinc coated, heavy-gage (14-gage minimum) galvanized steel. The cabinet finish shall betested in accordance with ASTM B-117 salt spray surface scratch test (SST) procedure for a minimum of 1000hours. Such documentation shall be included in all submittals. Provide cabinet panels with lifting handles andwater- and air-tight seal. Insulate all exposed vertical panels, top covers and base pan.

2.4.3 Compressor

Each compressor system must have the following:

a. High pressure safety switch, and internal thermal overload protection.

b. Factory installed vibration dampeners on all mounting points.

c. Factory installed crank case heater or other control logic to ensure reliable operation in freezing environments.

d. Oil separator with an oil balance circuit.

2.5 COMPONENTS

2.5.1 Fans

Fan wheel shafts must be supported by either maintenance-accessible lubricated antifriction block-type bearings, or permanently lubricated ball bearings. Unit fans must be selected to produce the flow rate required at the fan total pressure. Motor starters, if applicable, must be magnetic across-the-line type with a totally enclosed enclosure. Thermal overload protection must be of the manual or automatic-reset type. Fan wheels or propellers must be constructed of aluminum or galvanized steel. Centrifugal fan wheel housings must be of galvanized steel, and both centrifugal and propeller fan casings must be constructed of aluminum or galvanized steel. Steel elements of fans, except fan shafts, must be hot-dipped galvanized after fabrication or fabricated of mill galvanizedsteel. Mill-galvanized steel surfaces and edges damaged or cut during fabrication by forming, punching, drilling, welding, or cutting must be recoated with an approved zinc-rich compound. Fan wheels or propellers must be statically and dynamically balanced. Direct-drive fan motors must be of the multiple-speed variety. Belt-driven fans must have adjustable sheaves. The sheave size must be selected so that the fan speed at the approximate midpoint of the sheave adjustment will produce the specified air quantity. Centrifugal scroll-type fans must be provided with streamlined orifice inlet and V-belt drive. Each drive will be independent of any other drive.

Propeller fans must be direct-drive type with fixed pitch blades. V-belt driven fans must be mounted on a corrosion protected drive shaft supported by either maintenance-accessible lubricated antifriction block-type bearings, or permanently lubricated ball bearings. Each drive will be independent of any other drive. Drive bearings must be protected with water slingers or shields. V-belt drives must be fitted with guards where exposed to contact by personnel and fixed pitch sheaves. Axial fans may not be used to distribute air through duct systems.

2.5.2 Air Filters

High efficiency particulate air (HEPA) filters shall be provided. Filters must have a MERV of 17 when tested in accordance with ASHRAE 52.2. Filter assembly must include; holding frame and fastener assembly, filter cartridge, mounting frame, and retainer assembly. Reinforce filter media with glass fiber mat. Pressure dropacross clean filter shall not exceed 1 inches of water gage.

2.5.3 Internal Dampers

Dampers must be parallel blade type with renewable blade seals and be integral to the unitary unit. Damper provisions must be provided for each outside air intake, exhaust, economizer, and mixing boxes. Dampers musthave manual modulation and operate as specified.

2.5.4 Mixing Boxes

Mixing boxes must match the base unit in physical size and must include equally-sized openings, each capable offull air flow. Arrangement must be as indicated.

2.5.5 Refrigerant Solenoid Valves

Solenoid valves must comply with ANSI/AHRI 760 and UL 429, be suitable for continuous duty rated voltage at maximum and minimum encountered pressure and temperature service conditions. Solenoid

valves must be direct-acting or pilot-operating type, packless, seal capped. Manual lifting provisions must be furnished. Solenoid coils must comply with NEMA 250 type 4.

Valves must have safe working pressure of 125 percent of maximum working pressure and a maximum operating pressure differential of at least half of the valve maximum working pressure at 85 percent rated voltage. Valves must have an operating pressure differential suitable for the fluid phase and refrigerant used.

2.5.6 Branch Selector Unit

Branch Selector port control must be provided for each connected indoor unit to enable individual heating and cooling selection year round unless otherwise indicated in the contract drawings. The cabinet must be galvanized steel. The branch selector units must be factory assembled, wired, piped and run tested.

2.6 EQUIPMENT ACCESSORIES AND MISCELLANEOUS EQUIPMENT

2.6.1 Refrigerant Leak Detector

Provide continuously-operating, halogen-specific type refrigerant leak detector.Detector must be appropriate forthe refrigerant in use.

Detector must be specifically designed for area monitoring and must include a single sampling point installed where indicated. Detector design and construction must be compatible with the temperature, humidity, barometric pressure and voltage fluctuations of the operating area. Detector must have an adjustable sensitivity such that it can detect refrigerant at or above 3 parts per million (ppm). Detector must be supplied factory- calibrated for the appropriate refrigerant(s).Detector must be provided with an alarm relay output which energizeswhen the detector detects a refrigerant level at or above the TLV-TWA (or toxicity measurement consistent therewith) for the refrigerant in use. The detector's relay must be capable of initiating corresponding alarms and ventilation system as indicated on the drawings. Detector must be provided with a failure relay output that energizes when the monitor detects a fault in its operation.

2.6.2 Refrigerant Signs

Refrigerant signs must be a medium-weight aluminum type with a baked enamel finish. Signs must be suitable forindoor or outdoor service. Signs must have a white background with red letters not less than 0.5 inches in height.

2.6.2.1 Installation Identification

Provide each new refrigeration system with a refrigerant sign which indicates the following as a minimum:

a. Contractor's name.

b. Refrigerant number and amount of refrigerant.

c. The lubricant identity and amount.

d. Field test pressure applied.

2.6.2.2 Controls and Piping Identification

Provide refrigerant systems containing more than 110 lb of refrigerant with refrigerant signs which designate thefollowing as a minimum:

a. Valves or switches for controlling the refrigerant flow and the refrigerant compressor.

b. Pressure limiting device(s).

2.6.3 Gaskets

Provide gaskets conforming to ASTM F104 - classification for compressed sheet with nitrile binder and acrylic fibersfor maximum 700 degrees F service.

2.6.4 Bolts and Nuts

Bolts and nuts must be in accordance with ASTM A307. The bolt head must be marked to identify the manufacturer and the standard with which the bolt complies in accordance with ASTM A307.

2.7 FINISHES

2.7.1 Coil Corrosion Protection

Provide coil with a uniformly applied epoxy electrodeposition, phenolic, or vinyl type coating to all coil surfaceareas without material bridging between fins. Submit product data on the type coating selected, the coating thickness, the application process used, the estimated heat transfer loss of the coil, and verification of conformance with the salt spray test requirement. Coating must be applied at either the coil or coating manufacturer's factory. Coating process must ensure complete coil encapsulation. Coating must be capable ofwithstanding a minimum 1,000 hours exposure to the salt spray test specified in ASTM B117 using a 5 percentsodium chloride solution.

2.7.2 Equipment and Components Factory Coating

Unless otherwise specified, equipment and component items, when fabricated from ferrous metal, must be factory finished with the manufacturer's standard finish, except that items located outside of buildings must haveweather resistant finishes that will withstand 500 hours exposure to the salt spray test specified in ASTM B117. Immediately after completion of the test, the specimen must show no signs of blistering, wrinkling, cracking, or loss of adhesion and no sign of rust creepage beyond 1/8 inch on either side of the scratch mark. Cut edges of galvanized surfaces where hot-dip galvanized sheet steel is used must be coated with a zinc-rich coating conforming to ASTM D520, Type I.

Where stipulated in equipment specifications of this section, coat finned tube coils of the affected equipment as specified below. Apply coating at the premises of a company specializing in such work. Degrease and prepare for coating in accordance with the coating applicator's procedures for the type of metals involved. Completed coating must show no evidence of softening, blistering, cracking, crazing, flaking, loss of adhesion, or "bridging" between the fins.

2.7.2.1 Phenolic Coating

Provide a resin base thermosetting phenolic coating. Apply coating by immersion dipping of the entire coil. Provide a minimum of two coats. Bake or heat dry coils following immersions. After final immersion and prior to final baking, spray entire coil with particular emphasis given to building up coating on sheared edges. Total dry film thickness must be 2.5 to 3.0 mils.

2.7.2.2 Chemical Conversion Coating with Polyelastomer Finish Coat

Dip coils in a chemical conversion solution to molecularly deposit a corrosion resistant coating by electrolysis action. Cure conversion coating at a temperature of 110 to 140 degrees F for a

minimum of 3 hours. Coat coil surfaces with a complex polymer primer with a dry film thickness of 1 mil. Cure primer coat for a minimum of 1 hour. Using dip tank method, provide three coats of a complex polyelastomer finish coat. After each of the first two finish coats, cure the coils for 1 hour. Following the third coat, spray a fog coat of an inert sealer on the coil surfaces. Total dry film thickness must be 2.5 to 3.0 mils. Cure finish coat for a minimum of 3 hours. Coating

materials must have 300 percent flexibility, operate in temperatures of minus 50 to plus 220 degrees F, andprotect against atmospheres of a pH range of 1 to 14.

2.7.2.3 Vinyl Coating

Apply coating using an airless fog nozzle. For each coat, make at least two passes with the nozzle. Materials to be applied are as follows:

a. Total dry film thickness, 6.5 mils maximum

b. Vinyl Primer, 24 percent solids by volume: One coat 2 mils thick

c. Vinyl Copolymer, 30 percent solids by volume: One coat 4.5 mils thick

2.7.3 Factory Applied Insulation

Refrigeration equipment must be provided with factory installed insulation on surfaces subject to sweating including the suction line piping. Where motors are the gas-cooled type, factory installed insulation must be provided on the cold-gas inlet connection to the motor in accordance with manufacturer's standard practice. Factory insulated items installed outdoors are not required to be fire-rated. As a minimum, factory insulated items installed indoors must have a flame spread index no higher than 75 and a smoke developed index no higher than 150. Factory insulated items (no jacket) installed indoors and which are located in air plenums, in ceiling spaces, and in attic spaces must have a flame spread index no higher than 25 and a smoke developed index no higher than 50. Flame spread and smoke developed indexes must be determined by ASTM E84.

Insulation must be tested in the same density and installed thickness as the material to be used in the actual construction. Material supplied by a manufacturer with a jacket must be tested as a composite material.

Jackets, facings, and adhesives must have a flame spread index no higher than 25 and a smoke developed index no higher than 50 when tested in accordance with ASTM E84.

2.8 TESTS, INSPECTIONS, AND VERIFICATIONS

All manufactured units must be inspected and tested, and documentation provided to demonstrate that each unitis in compliance with applicable ANSI/AHRI and UL requirements and that the minimum efficiency requirements ofASHRAE 90.1 - SI ASHRAE 90.1 - IP have been met.

TAB 3

EXHIBIT B

UOG BID NO.B21-17

PURCHASING OF HVAC EQUIPMENT OF THE UNIVERSITY OF GUAM

Scope of Work

1. Scope of the Work
   This bid is to select and award a contract for the purchasing of multiple Air Conditioning units for the University of Guam.

2. Bid Submittals

   a) Bid prices shall be submitted on Bid Price Form. All prices shall include shipping, delivery,and manufacturer's warranty. Any additional cost not stated in this bid but are required to complete the delivery must be included in the bidder's price.

   b) Bidder shall submit an electronic copy to the Share folder that UOG procurement office provides.
   Contractor is required to submit prices for Table 1.0.
   Bid award to be based on the required items in Table 1.0 and to be based on price, compliance to the specification, services, delivery and any requirements in the BID package, BID NO. B21-17.

Table 1.0 Bid Price Form

No.	ITEM DESCRIPTION					BID Price
1	LOCATION	UNIT	TONS	VOLTAGE	TVX	
	RFK BUILDING SECOND FLOOR	1	50	208 / 230	2 EA. - 25	$ 55,372 32
	RFK BUILDING FIRST FLOOR	1	40	208 / 230	2 EA. -	$ 52,856.01
	20RFK BUILDING FIRST FLOOR MAIN ENTRANCE	1	15	208 / 230	2 EA. -	$ 17,711.51
	7.5RFK BUILDING FIRST FLOOR AV ROOM	1	15	208 / 230	2 EA. -	$ 17,711.51
	7.5RFK BUILDING FIRST FLOOR OFFICES	1	20	208 / 230	2 EA. - 10	$ 24,262.45
	PIP (GLE) SECOND FLOOR	1	20	208 / 230	2 EA. -	$ 24,262.45
	10SCIENCE BUILDING FIRST FLOOR	1	40	208 / 230	2 EA. -	$ 52,856.01
	20SCIENCE BUILDING SECOND FLOOR	1	40	208 / 230	2 EA. -	$ 52,856.01
	20SCIENCE BUILDING THIRD FLOOR	1	20	208 / 230	2 EA. -	$ 24,262.45
	10EGLISH COMMUNICATION BUILDING CLASSROO	1	30	208 / 230	2 EA. -	$ 36,503.19
	15COMPUTER CENTER OIT					

	BUILDING FIRST FLOOR	1	50	277 / 460	2 EA. - 25	$ 55,372.32
	LECTURE HALL AUDITORIUM	1	20	277 / 460	2 EA. - 10	$ 24,262.45
	HSS BUILDING	2	50	277 / 460	2 EA. – 25	$ 110,134.64
	HSS BUILDING	1	30	277 / 460	2 EA. – 15	$ 36,503.19
Grand Total						**$ 584,926.51**
Delivery: 24 weeks after receipt of purchase order						

SIGNATURE OF BIDDER DATE

OPTIONS

For Table 2.0 Options, the bidder's price will not be included as part of the total price evaluation for this bid award. UOG reserves the right to exercise any or part of the options requested. Insert any additional options recommended.

Table 2.0 Options

No.	Item Description	Price
1	Services for Maintenance and upkeep. Excluded Major Repair	$ 26,000.00 (Quarterly PMI)
2	Services for disposal.	$ 54,148.63
3	Replacement/trade in program	$ 196,766.42 (Install/Trade in Only)

OTHER NOTES:

1. These specifications have been written to describe minimum equipment and performance requirements to be supplied by the equipment manufacturer bidding. Reasonable tests may be conducted upon delivery before acceptance.

2. The University reserves the right to accept and/or reject any and all bids, to waive any defects, irregularities, or specification discrepancies and to award the bid deemed to be in the best interest of the University.

NOTE: Name and title of author of specifications:

University of Guam

Glenn Leon Guerrero, Director, Facilities Management & Services, Email. glennlg@triton.uog.edu

Emily Gumataotao, Supply Management Administrator, Email: eggumataotao@triton.uog.edu

UNIVERSITY OF GUAM
UNIBETSEDÅT GUÅHAN

ADMINISTRATION & FINANCE
Consolidated Procurement Office

AMENDMENT 1

Invitation for Bid (IFB)
UOG IFB No. B21-17

Date Issued: October 29, 2021

PURCHASING OF HVAC EQUIPMENT

This is to notify all prospective offerors of the following amendment:

1.1 **PRE-BID Conference and Site visit is scheduled for Wednesday, November 3, 2021 at 10:00am. Meet-up will be at Facilities Maintenance Services, 1st Floor Bay. Please contact 735-2377 for directions.**

All other terms and conditions remain the same.

Emily G. Gumataotao
Supply Management Administrator

Please acknowledge receipt and email: uog.bids@triton.uog.edu:

Name of company: Tony's Workshop

Michael Ecalnea 11/30/21
Print Name/Signature/date

T: +1 671.735.2925 F: +1 671.735.3010 W: www.uog.edu E: uog.bids@triton.uog.edu
Mailing Address: 303 University Drive UOG Station Mangilao, Guam 96913

UNIVERSITY OF GUAM
UNIBETSEDÅT GUÅHAN

ADMINISTRATION & FINANCE
Consolidated Procurement Office

AMENDMENT 2

Invitation for Bid (IFB)
UOG IFB No. B21-17

Date Issued: October 29, 2021

PURCHASING HVAC EQUIPMENT

This is to notify all prospective offerors of the following amendment set forth below:

1.1 **REPLACE** "**Cover Page**" with corrected form as set forth in the attached.
1.2 **ADD:** *after* Cover Page, p.2 "**Bidders Registry**" with corrected form as set forth in the attached.
1.3 **REPLACE** "**Table of Contents**" with corrected form as set forth in the attached.
1.4 **REPLACE** "**Instructions to Bidders**" with corrected forms as set forth in the attached.
1.5 **ADD:** *after* ATTACHMENT I, "Register of Wage Determinations Under The Service Contract Act"
1.6 **REPLACE** Exhibit B "Bid Price Form" with corrected forms as set forth in the attached.

All other terms and conditions remain the same.

Emily G. Gumataotao
Supply Management Administrator

Please acknowledge receipt and email: **uog.bids@triton.uog.edu:**

Name of company: Tony's Workshop

Michael Ecalnea 11/30/21
Print Name/Signature/date

T: +1 671.735.2925 F: +1 671.735-3010 W: www.uog.edu E: uog.bids@triton.uog.edu
Mailing Address: 303 University Drive UOG Station Mangilao, Guam 96913

UNIVERSITY OF GUAM
UNIBETSEDÅT GUÅHAN

ADMINISTRATION & FINANCE
Consolidated Procurement Office

AMENDMENT 3

Invitation for Bid (IFB)
UOG IFB No. B21-17

Date Issued: November 19, 2021

"PURCHASING HVAC EQUIPMENT"

This is to notify all prospective offerors of the following amendment set forth below:

1.1 Question & Answer Sheet 1 as set forth in the attached.
1.2 REPLACE Exhibit B "Scope of Work & Bid Price Form" with corrected forms as set forth in the attached.
1.3 Copy of Pre-bid Conference Sign-In sheet as set forth in the attached.
1.4 Deadline for submission should read as follows: Monday, November 29, 2021 at 2:00 p.m. (your bid submission must be submitted electronically to the Bid Share folder provided by UOG Procurement Office on or before 2:00 p.m.) Bid opening will take place at 3:15 p.m. via ZOOM link provided by procurement office to all registered offerors.

All other terms and conditions remain the same.

Emily G. Gumataotao
Supply Management Administrator

Please acknowledge receipt and email: **uog.bids@triton.uog.edu:**

Name of company: Tony's Workshop

Michael Ecalnea 11/30/21
Print Name/Signature/date

T: +1 671.735.2925 F: +1 671.735-3010 W: www.uog.edu E: uog.bids@triton.uog.edu
Mailing Address: 303 University Drive UOG Station Mangilao, Guam 96913

UNIVERSITY OF GUAM
UNIBETSEDÅT GUÅHAN

ADMINISTRATION & FINANCE
Consolidated Procurement Office

AMENDMENT 4

Invitation for Bid (IFB)
UOG IFB No. B21-17

Date Issued: November 22, 2021

"PURCHASING HVAC EQUIPMENT"

This is to notify all prospective offerors of the following amendment set forth below:

1.1 Question & Answer Sheet 2 as set forth in the attached.

All other terms and conditions remain the same.

Emily G. Gumataotao
Supply Management Administrator

Please acknowledge receipt and email: **uog.bids@triton.uog.edu:**

Name of company: Tony's Workshop

Michael Ecalnea 11/30/21
Print Name/Signature/date

T: +1 671.735.2925 F: +1 671.735-3010 W: www.uog.edu E: uog.bids@triton.uog.edu
Mailing Address: 303 University Drive UOG Station Mangilao, Guam 96913

UNIVERSITY OF GUAM
UNIBETSEDÅT GUÅHAN

ADMINISTRATION & FINANCE
Consolidated Procurement Office

AMENDMENT 5

Invitation for Bid (IFB)
UOG IFB No. B21-17

Date Issued: November 24, 2021

"PURCHASING HVAC EQUIPMENT"

This is to notify all prospective offerors of the following amendment set forth below:

1.1 Deadline for submission should read as follows: Monday, December 06, 2021 at 2:00 p.m. (your bid submission must be submitted electronically to the Bid Share folder provided by UOG Procurement Office on or before 2:00 p.m.) Bid opening will take place at 3:15 p.m. via ZOOM link provided by procurement office to all registered offerors.

All other terms and conditions remain the same.

Emily G. Gumataotao
Supply Management Administrator

Please acknowledge receipt and email: **uog.bids@triton.uog.edu:**

Name of company: Tony's Workshop

Michael Ecalnea 11/30/21
Print Name/Signature/date

T: +1 671.735.2925 F: +1 671.735-3010 W: www.uog.edu E: uog.bids@triton.uog.edu
Mailing Address: 303 University Drive UOG Station Mangilao, Guam 96913

UNIVERSITY OF GUAM
UNIBETSEDÅT GUÅHAN

ADMINISTRATION & FINANCE
Consolidated Procurement Office

AMENDMENT 6

Invitation for Bid (IFB)
UOG IFB No. B21-17

Date Issued: December 3, 2021

"PURCHASING HVAC EQUIPMENT"

This is to notify all prospective offerors of the following amendment set forth below:

1.1 Question & Answer Sheet 3 as set forth in the attached.

All other terms and conditions remain the same.

Emily G. Gumataotao
Supply Management Administrator

Please acknowledge receipt and email: **uog.bids@triton.uog.edu:**

Name of company: Tony's Workshop

Michael Ecalnea 12/6/21
Print Name/Signature/date

T: +1 671.735.2925 F: +1 671.735-3010 W: www.uog.edu E: uog.bids@triton.uog.edu
Mailing Address: 303 University Drive UOG Station Mangilao, Guam 96913

ATTACHMENT B

SPECIAL GENERAL PROVISIONS

1. GENERAL INTENTION: It is the declared and acknowledged intention and meaning of this Special General Provision for the Bidder to provide the University of Guam with materials, supplies, or equipment completely assembled, and ready for use.

2. COMPETENCY OF BIDDERS: Bids will be considered only from such bidders who, in the opinion of the University, can show evidence of their ability, experience, and facilities to render satisfactory service.

3. CONTACT FOR CONTRACT ADMINISTRATION: If your firm receives a contract as a result of this invitation, please designate a person whom we may contact for prompt administration.

NAME: Michael SJ. Ecalnea TITLE: Project Engineer

NAME OF COMPANY: Tony's Workshop ADDRESS: PO Box 23066 GMF Barrigada, Guam 96921

TEL: (671) 637-3060 FAX: (671) 637-3139 E-Mail Address: mike@tonysworkshop.com
tonysworkshop@teleguam.net

4. INSPECTION: All supplies, materials, or equipment delivered under this contract shall be subject to the inspection and test conducted by the University at destination. If, in any case, the supplies, materials, or equipment are found to be defective in material, workmanship, performance or otherwise does not conform to the specifications, the University shall have the right to reject the items or require that they be corrected. The number of days required for correction will be determined by the University of Guam.

6. BID ELECTRONIC FILE: Bid file shall be marked with the bidder's name, bid invitation number, and bid title.

NOTE: UNDER NO CIRCUMSTANCES WILL LATE BIDS BE ACCEPTED BY THIS OFFICE.

7. RECEIPT, OPENING AND RECORDING OF BIDS: Bids and modifications shall be publicly opened in the presence of one or more witnesses, at the time, date, and place designated in the Invitation for Bid. The name of each bidder, the bid price, and such other information as is deemed appropriate by the Procurement Officer, shall be read aloud and recorded, or otherwise made available. The names and addresses of required witnesses shall be recorded at the opening. The opened bids shall be available for public inspection except to the extent the bidder designates trade secrets or other proprietary data to be confidential as set forth in accordance with Section 8, below. Materials so designated shall accompany the bid and shall be readily separable from the bid in order to facilitate public inspection of the non-confidential portion of the bid. Prices, makes and models or catalogue numbers of the items offered, deliveries, and terms of payment shall be publicly available at the time of bid opening regardless of any designation to the contrary.

8. CONFIDENTIAL DATA: The Procurement Officer shall examine the bids to determine the validity of any requests for nondisclosure of trade secrets and other proprietary data identified in writing. If the parties do not agree as to the disclosure of data, the Procurement Officer shall inform the bidders in writing what portions of the bid will be disclosed and that, unless the bidders protest under Chapter 9 of UOG Procurement Regulations, the bids will be so disclosed. The bids shall be opened to public inspection subject to any continuing prohibition on the disclosure of confidential data.

9. INQUIRIES: All inquiries or questions and concerns must be submitted to the President of the University of Guam in writing through the procurement office at uog.bids@triton.uog.edu. Oral communications will not be considered.

ATTACHMENT C

BIDDER'S QUALIFICATIONS

To be submitted in accordance with the provisions set forth in the INSTRUCTIONS TO BIDDERS contained in the bidding documents for the project.

The undersigned Bidder makes the following representations relating to its proposal to the UNIVERSITY OF GUAM.

The word "it", used herein by way of reference to the undersigned, shall be deemed to mean "he or she" if the Bidder is an individual and "they" if the Bidder is a partnership

1. It maintains a permanent place of business at

   Harmon, Guam

2. STANDARD FOR DETERMINATION OF QUALIFIED BIDDER: In order to qualify as responsible, a prospective bidder must meet the following standards as they relate to the particular procurement under consideration:

   (a) Has adequate financial resources for performance, or has the ability to obtain such resources as required during performance.

   (b) Has the necessary experience, organization, technical qualifications, skills, and facilities, or has the ability to obtain them.

   (c) Is able to comply with the proposed or required performance schedule.

   (d) Has a satisfactory record of integrity, judgment, and performance.

   (e) Must be able to conform to the requirements of the Equal Employment Opportunity Act.

3. It hereby represents and warrants that all statements set forth herein are true and correct. (If the Bidder is a partnership, the partnership name must be signed, followed by the signature of at least one of the partners. If the Bidder is a corporation, the corporate name must be signed, followed by the signature of a duly authorized officer and the corporate seal affixed. A typewritten copy of all such names and signatures shall be appended. No alterations, erasures, corrections or interlineations will be permitted).

Antonio C. Mendoza III

NAME OF BIDDER

ATTACHMENT D
BID SECURITY

BOND NO. KIC-15695-B

BID BOND
NO. B21-17

KNOW ALL MEN BY THESE PRESENTS that ANTONIO C. MENDOZA, III DBA: TONY'S WORKSHOP, as Principal, hereinafter called the "Principal", and (Bonding Company), DB INSURANCE CO., LTD., a duly admitted insurer under the laws of the Territory of Guam, as Surety, hereinafter called the "Surety", are held firmly bound unto the University of Guam for the sum of 15% OF TOTAL BID AMOUNT Dollars ($ 15% OF TOTAL BID AMOUNT), for payment of which sum will and truly to be made, the said Principal and the said Surety bind ourselves, our heirs, executors, administrators, successors and assigns, jointly and severally, firmly by these presents.

Whereas, the Principal has submitted a bid for (identify project by number and brief description) UOG BID NO B21-17 PURCHASING OF HVAC EQUIPMENT.

NOW, THEREFORE, if the University of Guam shall accept the bid of the Principal, the Principal shall enter into a Contract with the University of Guam in accordance with the terms of such bid, and give such bond or bonds as may be specified in bidding or Contract Documents with good and sufficient surety for the faithful performance of such Contract and for the prompt payment of labor and material furnished in the prosecution thereof. In the event of the failure of the Principal to enter such Contract and give such bond or bonds, if the Principal shall pay to the University of Guam the difference not to exceed the penalty hereof between the amounts specified in said bid and such larger amount for which the University of Guam may in good faith contract with another party to perform work covered by said bid or an appropriate liquidated amount as specified in the Invitation for Bid, then this obligation shall be null and void, but otherwise will remain in full force and effect.

Signed and sealed this 3RD day of DECEMBER, 2021

ANTONIO C MENDOZA, III
DBA TONY'S WORKSHOP
(PRINCIPAL) (SEAL)

Jille Sugatan
(WITNESS)

Office Manager
(TITLE)

JEONG NAM KIM
(MAJOR OFFICER OF SURETY)

PRESIDENT & CEO
(TITLE)

CHANG SOO LEE
(MAJOR OFFICER OF SURETY)

EXECUTIVE VP
(TITLE)

MOYLAN'S INSURANCE UND., INC.
(RESIDENT GENERAL AGENT)

CAROLINA G. SERAFICA
SURETY DIVISION MANAGER

GOVERNMENT OF GUAM
DEPARTMENT OF REVENUE AND TAXATION
OFFICE OF THE BANKING AND INSURANCE COMMISSIONER

CERTIFICATE OF AUTHORITY

RENEWAL **COA218**

Know All Men By These Presents That:

Name **DB INSURANCE CO., LTD.**

Address 891-10, DAECHI-DONG, KANGNAM-GU
SEOUL, KOREA, KO

Classes of Insurance Authorized }

Accident & Health
Fidelity & Surety
Fire
Marine
Miscellaneous
Motor Vehicle
Prop. Damage & Liability
Workmens Comp
Reinsurance P & C

Having complied with the Insurance Law of Guam, is hereby authorized to transact as an insurer, the above named Classes of Insurance in Guam from the ***1st*** *day of* ***July, 2021*** *to the* ***1st*** *day of* ***July, 2022*** *unless authority is revoked for failure to comply with the law.*

General Agent(s):

MOYLAN'S INSURANCE UNDERWRITERS INC

In Witness Whereof, I have hereunto subscribed my name officially and have hereon impressed my Seal of Office at the City of Hagatña, Guam on this ***1st*** *day of* ***July, 2021***

MICHELLE B. SANTOS
Banking & Insurance Commissioner

공증인가 동방종합법무법인

Registered No. 2021 — 98

NOTARIAL CERTIFICATE

DONG BANG LAW & NOTARY OFFICE INC.
3F. 187,Toegye-ro. Jung-gu. Seoul. Korea

DB Financial Center 432 Teheran-ro Gangnam-Gu Seoul
Global Operations Part Fax 82-5[illegible]

POWER OF ATTORNEY

KNOW ALL MEN BY THESE PRESENTS:

That DB Insurance Co., Ltd., a corporation duly organized and existing under and by virtue of the laws of the Republic of Korea, and having its principal office at the address of DB Financial Center, 432, Teheran-ro, Gangnam-Gu, Seoul, the Republic of Korea, does hereby nominate, constitute and appoint *Moylan's Insurance Underwriters, Inc.*, a corporation organized and existing under and by virtue of the laws of the Territory of Guam, having its principal office at the address of 102 Jalale Center 424 West O'Brien Drive, Hagatna, Guam, its true and lawful attorney-in-fact to make, execute, seal and deliver any and all bond, undertakings, contracts and other writings of suretyship for it and on its behalf.

IN WITNESS WHEREOF, DB Insurance Co., Ltd. has caused these presents to be signed by its appropriate officers, and to be affixed of its corporate seal thereunto, on this *1st day of Jan., 2021*

DB INSURANCE CO., LTD

C. S. Lee

Chang Soo Lee, Executive Vice President

Chang Sik Oh

Chang Sik Oh, Secretary

[제42호 서식] 공증인가 동방종합법무법인 (영문사서본인용지)

등부 2021 년 제 98 호

Registered No 2021 - 98

인 증

NOTARIAL CERTIFICATE

위

위임장

에

기재된

오창식, 이창수

은

본 공증인의 면전에서 위 사서증서에 자기가 기명날인 한 것임을 자인하였다.

Chang Sik Oh,
Chang Soo Lee

personally appeared before me and admitted his(her) subscription to the attached

POWER OF ATTORNEY

2021년 1월 15일

이 사무소에서 위 인증한다.

This is hereby attested on this 15th day of Jan. 2021 at this office.

서울중앙지방검찰청소속

공증인가 동방종합법무법인

서울특별시 중구 퇴계로 187, 3층
(필동1가, 국제빌딩)

공증담당

변호사

BELONG TO SEOUL CENTRAL DISTRICT PROSECUTOR'S OFFICE

DONG BANG LAW & NOTARY OFFICE INC.

3F, 187, Toegye-ro, Jung-gu, Seoul, Korea

Chung, Kyung Yong

Attorney at law(Rep.) Chung, Kyung Yong

This office has been authorized by the Minister of Justice, the Republic of Korea, to act as Notary Public since Apr. 26, 1984 under Law No.5

공증인가 동방종합법무법인

Registered No. 2021 — 159

NOTARIAL CERTIFICATE

DONG BANG LAW & NOTARY OFFICE INC.
187,Toegye-ro, Jung-gu, Seoul, Korea

DB Insurance

DB Financial Center 432 Teheran-ro, Gangnam-Gu, Seoul [illegible]
Global Operations Part [illegible] Tel [illegible] www.dbins.com

POWER OF ATTORNEY

KNOW ALL MEN BY THESE PRESENTS:

That I, *Jeong Nam Kim*, President & CEO of DB Insurance Co., Ltd., a corporation duly organized and existing under and by virtue of the laws of the Republic of Korea, having its principal office at the address of DB Financial Center, 432, Teheran-ro, Gangnam-Gu, Seoul, the Republic of Korea, does hereby nominate, constitute and appoint *Jon Jo Chao, Branch Manager* of the Company's Guam Branch at 233 Julale Center, 424 West O'Brien Drive, Hagatna, Guam 96910, my true and lawful attorney-in-fact to make, execute, seal and deliver any and all bonds, undertakings, contracts and other writings of suretyship for the Company and in my behalf.

IN WITNESS WHEREOF, DB Insurance Co., Ltd. has caused these presents to be signed by me and *the Corporate Secretary*, and to be affixed of its corporate seal thereunto on this *1st day of January, 2021*.

DB INSURANCE CO., LTD.

Jeong Nam Kim, President & CEO

Chang Sik Oh

Chang Sik Oh, Secretary

[제43호 서식] 공증인가 동방종합법무법인 (영문사서대리인용지)

등부 2021 년 제 159 호

Registered No. 2021 - 159

인 증

NOTARIAL CERTIFICATE

위 위임장 에 기재된 디비손해보험(주) 대표이사 김정남 의 대리인 김태용 은 본 공증인의 면전에서 위 본인이 기명날인 한 것임을 자인하였다.

Tae Yong Kim attorney - in fact of Jeong Nam Kim President& CEO DB iNSURANCE cO.,Ltd appeared before me and admitted said principal's subscription to the attached

POWER OF ATTORNEY

2021년 1월 21일 이 사무소에서 위 인증한다.

This is hereby attested on this 21st day of Jan. 2021 at this office.

서울지방검찰청소속 공증인가 동방종합법무법인 서울특별시 중구 퇴계로 187

BELONG TO SEOUL CENTRAL DISTRICT PROSECUTORS OFFICE DONG BANG LAW & NOTARY OFFICE INC. 187,Toegye-ro, Jung-gu, Seoul, Korea

공증담당 변호사 채 이 식

Lee Sik Chai

Attorney at law(Rep.) **Chai. Lee Sik**

This office has been authorized by the Minister of Justice, the Republic of Korea, to act as Notary Public since Apr. 26, 1984, under Law No. 5

[제42호 서식] 공증인가 동방종합법무법인 (영문사서본인용지)

등부 2021 년 제 159 호

Registered No. 2021 159

인 증

NOTARIAL CERTIFICATE

위 위임장 에 기재된 오창식 은 본 공증인의 면전에서 위 사서증서에 자기가 기명날인 한 것임을 자인하였다.

Chang Sik Oh Personally appeared before me and admitted his(her) subscription to the attached POWER OF ATTORNEY

2021년 1월 21일 이 사무소에서 위 인증한다.

This is hereby attested on this 21st day of Jan. 2021 at this office.

서울중앙지방검찰청소속
공증인가 동방종합법무법인
서울특별시 중구 퇴계로 187, 3층
(필동1가, 국제빌딩)
공증담당
변호사 이 석 채

BELONG TO SEOUL CENTRAL DISTRICT PROSECUTORS OFFICE
DONG BANG LAW & NOTARY OFFICE INC.
3F.187,Toegye-ro, Jung-gu, Seoul, Korea

Lee Sik Chai

Attorney at law(Rep.) Chai. Lee Sik

This office has been authorized by the Minister of Justice, the Republic of Korea, to act as Notary Public since Apr. 25, 198 under Law No.5

공증인가 동방종합법무법인

Registered No. 2021 —160

NOTARIAL CERTIFICATE

DONG BANG LAW & NOTARY OFFICE INC.
187,Toegye-ro, Jung-gu, Seoul, Korea

DB Insurance

DB Financial Center 432 Teheran-ro Gangnam-gu Seoul Korea 06133
Global Operations Party Fax 82 505 181 1023 Tel 82 2-3011 5825 www.dbins.com

POWER OF ATTORNEY

KNOW ALL MEN BY THESE PRESENTS:

That I, *Chang Soo Lee Executive Vice President* of DB Insurance Co., Ltd., a corporation duly organized and existing under and by virtue of the laws of the Republic of Korea, having its principal office at the address of DB Financial Center, 432, Teheran-ro, Gangnam-Gu, Seoul, the Republic of Korea, does hereby nominate, constitute and appoint *Yon Jo Choi Branch Manager* of the Company's Guam Branch at 233 Julale Center, 424 West O'Brien Drive, Hagatna, Guam 96910, my true and lawful attorney-in-fact to make, execute, seal and deliver any and all bonds, undertakings, contracts and other writings of suretyship for the Company and in my behalf

IN WITNESS WHEREOF, DB Insurance Co., Ltd has caused these presents to be signed by me and *the Corporate Secretary*, and to be affixed of its corporate seal thereunto on this *1st day of January, 2021*

DB INSURANCE CO., LTD.

C. S. Lee

Chang Soo Lee, Executive Vice President

Chang Sik Oh

Chang Sik Oh, Secretary

[제42호 서식] 공증인가 동방종합법무법인 (영문사서본인용지)

등부 2021 년 제 160 호 2021 160

인 증

NOTARIAL CERTIFICATE

위

위임장

에

기재된

이창수

오창식

은

본 공증인의 면전에서 위 사서증서에 자기가 기명날인 한 것임을 자인하였다.

2021년 1월 21일

이 사무소에서 위 인증한다.

서울중앙지방검찰청소속

공증인가 동방종합법무법인

서울특별시 중구 퇴계로 187, 3층

(필동1가, 국제빌딩)

공증담당

변호사

Chang Soo Lee
Chang Sik Oh

personally appeared before me and admitted his(her) subscription to the attached

POWER OF ATTORNEY

This is hereby attested on this 21st day of Jan. 2021 at this office.

BELONG TO SEOUL CENTRAL DISTRICT PROSECUTORS OFFICE

DONG BANG LAW & NOTARY OFFICE INC.

3F.187,Toegye-ro, Jung-gu, Seoul, Korea

Attorney at law(Rep.) Chai. Lee Sik

This office has been authorized by the Minister of Justice, the Republic of Korea, to act as Notary Public since Apr. 28. 195 Lunder Law No.5

ATTACHMENT E
MAJOR SHAREHOLDER DISCLOSURE AFFIDAVIT

CITY OF Tamuning)
) ss.
ISLAND OF GUAM)

A. I, the undersigned, being first duly sworn depose and say that I am an authorized representative of the offeror and that (please check only one):

(X) The offeror is an individual or sole proprietor and owns the entire (100%) interest in the offering business.

( ) The offeror is a corporation, partnership, joint venture, or association known as _____ (please state name of offeror company) and the persons, companies, partners, or joint ventures who have held more than 10% of the shares or interest in the offering business during the 365 days immediately preceding the submission date of the proposal are as follows (if none, please so state):

NAME	ADDRESS	% of Interest

B Further, I say that the persons who have received or are entitled to receive a commission, gratuity or other compensation for procuring or assisting in obtaining business related to the bid or proposal for which affidavit is submitted are as follows (if none, please so state):

NAME	ADDRESS	Compensation

C If the ownership of the offering business should change between the time this affidavit is made and the time an award is made or a contract is entered into then I promise personally to update the disclosure required by 5 GCA § 5233 by delivering another affidavit to the government.

Antonio C. Mendoza III

Signature of one of the following:
Offeror, if the offeror is an individual;
Partner, if the offeror is a partnership;
Officer, if the offeror is a corporation

RAMON J.D. QUINENE
NOTARY PUBLIC
In and for Guam, U.S.A.
My Commission Expires: JUNE 29, 2025
1779 Army Dr. Ste. 105 Tamuning, Guam 96913

Subscribed and sworn to before me
This 6th day of December, 2021

NOTARY PUBLIC
My commission expires June 29, 2025
(AG Procurement Form 002 (Rev. Nov 17, 2005)

ATTACHMENT F
AFFIDAVIT re NON-COLLUSION

CITY OF Tamuning)
) ss.
ISLAND OF GUAM)

Antonio C. Mendoza III (state name of affiant singing below), being first duly sworn deposes and says that:

1. The name of the offering company or individual is (state name of company) Antonio C. Mendoza III (Tony's Workshop)

2. The proposal for the solicitation identified above is genuine and not collusive or a sham. The offeror has not colluded, conspired, connived or agreed, directly or indirectly, with any other offeror or person, to put in a sham proposal or to refrain from making an offer. The offeror has not in any manner, directly or indirectly, sought by an agreement or collusion, or communication or conference, with any person to fix the proposal price of offeror or of any other offeror, or to fix any overhead, profit or cost element of said proposal price, or of that of any other offeror, or to secure any advantage against the government of Guam or any person interested in the proposed contract. All statements in this affidavit and in the proposal are true to the best of the knowledge of the undersigned. This statement is made pursuant to 2 GAR Division 4 § 3126(b).

3. I make this statement on behalf of myself as a representative of the offeror, and on behalf of the offeror's officers, representatives, agents, subcontractors, and employees.

Antonio C. Mendoza III

Signature of one of the following:
Offeror, if the offeror is an individual;
Partner, if the offeror is a partnership;
Officer, if the offeror is a corporation

RAMON J.D. QUINENE
NOTARY PUBLIC
In and for Guam, U.S.A.
My Commission Expires: **JUNE 29, 2025**
1779 Army Dr. Ste. 105 Tamuning, Guam 96913

Subscribed and sworn to before me

This 6th day of December, 2021

NOTARY PUBLIC
My commission expires June 29, 2025
(AG Procurement Form 003 (Jul. 12, 2010)

ATTACHMENT G

AFFIDAVIT re GRATUITIES, KICKBACKS AND FAVORS

CITY OF Tamuning)
) ss.
ISLAND OF GUAM)

Antonio C. Mendoza III (state name of affiant signing below), being first duly sworn, deposes and says that:

1. The name of the offering firm or individual is (state name of offeror company) Antonio C. Mendoza III (Tony's Workshop) = Affiant is the offeror (state one of the following: the offeror, a partner of the offeror, and officer of the offeror) making the foregoing identified bid or proposal.
2. To the best of affiant's knowledge, neither affiant, nor any of the offeror's officers, representatives, agents subcontractors, or employees have violated, are violating the prohibition against gratuities, kickbacks and favors set forth in UOG Procurement Manual Section 11.7 Further, affiant promises, on behalf of offeror, not to violate the prohibition against gratuities, kickbacks and favors as set forth in UOG Procurement Manual Section 11.7.
3. To the best of affiant's knowledge, neither affiant, nor any of the offeror's officers, representatives, agents, subcontractors, or employees have offered, given or agreed to give, any government of Guam employee or former government employee, any payment, gift, kickback, gratuity or offer of employment in connection with the offeror's proposal.
4. I make this statement on behalf of myself as a representative of the offeror, and on behalf of the offeror's officers, representatives, agents, subcontractors, and employees.

Antonio C. Mendoza III
Signature of one of the following:
Offeror, if the offeror is an individual;
Partner, if the offeror is a partnership;
Officer, if the offeror is a corporation

RAMON J.D. QUINENE
NOTARY PUBLIC
In and for Guam, U.S.A.
My Commission Expires: JUNE 29, 2025
1779 Army Dr. Ste. 105 Tamuning, Guam 96913

Subscribed and sworn to before me
This 6th day of December 2021

NOTARY PUBLIC
My commission expires June 29, 2025
(AG Procurement Form 004 (Jul. 12, 2010)

ATTACHMENT H
AFFIDAVIT RE ETHICAL STANDARDS

CITY OF Tamuning)
) ss.
ISLAND OF GUAM)

Antonio C. Mendoza III (state name of affiant signing below), being first duly sworn, deposes and says that:

The affiant is the offeror (state one of the following: the offeror, a partner of the offeror, an officer of the offeror) making the foregoing identified bid or proposal. To the best of affiant's knowledge, neither affiant nor any officers, representatives, agents, subcontractors or employees of offeror have knowingly influenced any government of Guam employee to breach any of the ethical standards set forth in 5 GCA Chapter 5, Article 11. Further, affiant promises that neither he or she, nor any officer, reprehensive, agent, subcontractor, or employee of offeror will knowingly influence any government of Guam employee to breach any ethical standards set forth in 5 GCA Chapter 5, Article 11. These statements are made pursuant to UOG Procurement Manual Section 11.3.3.

Antonio C. Mendoza III
Signature of one of the following:
Offeror, if the offeror is an individual;
Partner, if the offeror a partnership;
Officer, if the offeror is a corporation.

Subscribed and sworn to before me
This 6th day of December, 2021

NOTARY PUBLIC

My commission expires June 29 2025.

RAMON J.D. QUINENE
NOTARY PUBLIC
In and for Guam, U.S.A.
My Commission Expires: JUNE 29, 2025
1779 Army Dr. Ste. 105 Tamuning, Guam 96913

(AG Procurement Form 005 (Jul. 12, 2010)

ATTACHMENT J
AFFIDAVIT re CONTINGENT FEES

CITY OF Tamuning)
) **ss.**
ISLAND OF GUAM)

Antonio C. Mendoza III (state name of affiant signing below), being first duly sworn, deposes and says that:

1. The name of the offering company or individual is (state name of company) Antonio C. Mendoza III DBA Tony's Workshop

2. As a part of the offering company's bid or proposal, to the best of my knowledge, the offering company has not retained any person or agency on a percentage commission, or other contingent arrangement to secure this contract. This statement is made pursuant to UOG Procurement Manual Section 11.8 .2

3. As a part of the offering company's bid or proposal, to the best of my knowledge, the offering company has not retained a person to solicit or secure a contract with the government of Guam upon an agreement or understanding for a commission, percentage brokerage, or contingent fee except for retention of bona fide employees or bona fide established commercial selling agencies for the purpose of securing business. This statement is made pursuant to UOG Procurement Manual Section 11.8.1

4. I make these statements on behalf of myself as a representative of the offeror, and on behalf of the offeror's officers, representatives, agents, subcontractors, and employees.

RAMON J.D. QUINENE
NOTARY PUBLIC
In and for Guam, U.S.A.
My Commission Expires: JUNE 29, 2025
1779 Army Dr. Ste. 105 Tamuning, Guam 96913

Antonio C. Mendoza III
Signature of one of the following:
Offeror, if the offeror is an individual;
Partner, if the offeror is a partnership;
Officer, if the offeror is a corporation

Subscribed and sworn to before me

This 6th day of December, 2021

NOTARY PUBLIC
My commission expires June 29 2025
(AG Procurement Form 007 (Jul. 15, 2010)

ATTACHMENT I

DECLARATION re COMPLIANCE WITH U.S. DOL WAGE DETERMINATIONS

Procurement No.: UOG BID B21-17

Name of Offeror Company: Antonio C. Mendoza III DBA Tony's Workshop

I, Antonio C. Mendoza III hereby certify under penalty of perjury:

(1) That I am the offeror (please select one: *the offeror, a partner of the offeror, an officer of the offeror)* making the bid or proposal in the foregoing identified procurement;

(2) That I have read and understand the provisions of 5 GCA § 5801and 5802 which read:

§ 5801. Wage Determination Established.

In such cases where the government of Guam enters into contractual arrangements with a sole proprietorship, a partnership or a corporation ("contractor") for the provision of a service to the government of Guam, and in such cases where the contractor employs a person(s) whose purpose, in whole or in part, is the direct delivery of service contracted by the government of Guam, then the contractor shall pay such employee(s) in accordance with the Wage Determination for Guam and the Northern Mariana Islands issued and promulgated by the U.S. Department of Labor for such labor as is employed in the direct delivery of contract deliverables to the government of Guam.

The Wage Determination most recently issued by the U.S. Department of Labor at the time a contract is awarded to a contractor by the government of Guam shall be used to determine wages, which shall be paid to employees pursuant to this Article. Should any contract contain a renewal clause, then at the time of renewal adjustments, there shall be made stipulations contained in the contract for applying the Wage Determination, as required by this Article, so the Wage Determination promulgated by the U.S. Department of Labor on a date most recent to the renewal date shall apply.

§ 5802. Benefits.

In addition to the Wage Determination detailed in this Article, any contract to which this Article applies shall also contain provisions mandating health and similar benefits for employees covered by this Article, such benefits having a minimum value as detailed in the Wage Determination issued and promulgated by the U.S. Department of Labor, and shall contain provisions guaranteeing a minimum of ten (10) paid holidays per annum per employees.

(3) That the offeror is in full compliance with 5 GCA § 5801 and § 5802, as may be applicable to the procurement referenced herein;

(4) That I have attached the most recent wage determination applicable to Guam issued by the U.S. Department of Labor. ***(INSTRUCTIONS – Please attach most updated version to bid package)***

(AG Procurement Form 006 (Feb. 16, 2010)

"REGISTER OF WAGE DETERMINATIONS UNDER THE SERVICE CONTRACT ACT
By direction of the Secretary of Labor

U.S. DEPARTMENT OF LABOR
EMPLOYMENT STANDARDS ADMINISTRATION
WAGE AND HOUR DIVISION
WASHINGTON D.C. 20210

Daniel W. Simms
Director

Division of
Wage Determinations

Wage Determination No.: 2015-5693
Revision No.: 13
Date Of Last Revision: 08/04/2021

Note: Under Executive Order (EO) 13658 an hourly minimum wage of $10.95 for calendar year 2021 applies to all contracts subject to the Service Contract Act for which the contract is awarded (and any solicitation was issued) on or after January 1 2015. If this contract is covered by the EO the contractor must pay all workers in any classification listed on this wage determination at least $10.95 per hour (or the applicable wage rate listed on this wage determination if it is higher) for all hours spent performing on the contract in calendar year 2021. The EO minimum wage rate will be adjusted annually. Additional information on contractor requirements and worker protections under the EO is available at www.dol.gov/whd/govcontracts.

States: Guam Northern Marianas Wake Island

Area: Guam Statewide

Northern Marianas Statewide

Wake Island Statewide

Fringe Benefits Required Follow the Occupational Listing

OCCUPATION CODE - TITLE	FOOTNOTE	RATE
01000 - Administrative Support And Clerical Occupations		
01011 - Accounting Clerk I		13.57
01012 - Accounting Clerk II		15.23
01013 - Accounting Clerk III		17.04
01020 - Administrative Assistant		21.43
01035 - Court Reporter		17.40
01041 - Customer Service Representative I		11.51
01042 - Customer Service Representative II		12.94
01043 - Customer Service Representative III		14.12
01051 - Data Entry Operator I		12.15
01052 - Data Entry Operator II		13.25
01060 - Dispatcher Motor Vehicle		17.39
01070 - Document Preparation Clerk		13.85
01090 - Duplicating Machine Operator		13.85
01111 - General Clerk I		10.35
01112 - General Clerk II		11.29
01113 - General Clerk III		12.68
01120 - Housing Referral Assistant		19.39
01141 - Messenger Courier		11.37
01191 - Order Clerk I		12.57
01192 - Order Clerk II		13.71
01261 - Personnel Assistant (Employment) I		15.95
01262 - Personnel Assistant (Employment) II		17.85
01263 - Personnel Assistant (Employment) III		19.89
01270 - Production Control Clerk		21.78
01290 - Rental Clerk		11.10

01300 - Scheduler Maintenance	15.55
01311 - Secretary I	15.55
01312 - Secretary II	17.40
01313 - Secretary III	19.39
01320 - Service Order Dispatcher	15.40
01410 - Supply Technician	21.43
01420 - Survey Worker	16.96
01460 - Switchboard Operator/Receptionist	10.36
01531 - Travel Clerk I	13.01
01532 - Travel Clerk II	14.12
01533 - Travel Clerk III	15.09
01611 - Word Processor I	14.53
01612 - Word Processor II	16.31
01613 - Word Processor III	18.26
05000 - Automotive Service Occupations	
05005 - Automobile Body Repairer Fiberglass	15.46
05010 - Automotive Electrician	14.52
05040 - Automotive Glass Installer	13.58
05070 - Automotive Worker	13.58
05110 - Mobile Equipment Servicer	11.65
05130 - Motor Equipment Metal Mechanic	15.46
05160 - Motor Equipment Metal Worker	13.58
05190 - Motor Vehicle Mechanic	15.46
05220 - Motor Vehicle Mechanic Helper	10.66
05250 - Motor Vehicle Upholstery Worker	12.64
05280 - Motor Vehicle Wrecker	13.58
05310 - Painter Automotive	14.52
05340 - Radiator Repair Specialist	13.58
05370 - Tire Repairer	12.67
05400 - Transmission Repair Specialist	15.46
07000 - Food Preparation And Service Occupations	
07010 - Baker	10.47
07041 - Cook I	13.26
07042 - Cook II	15.46
07070 - Dishwasher	9.31
07130 - Food Service Worker	9.45
07210 - Meat Cutter	12.13
07260 - Waiter/Waitress	9.27
09000 - Furniture Maintenance And Repair Occupations	
09010 - Electrostatic Spray Painter	18.04
09040 - Furniture Handler	10.95
09080 - Furniture Refinisher	18.04
09090 - Furniture Refinisher Helper	13.27
09110 - Furniture Repairer Minor	15.70
09130 - Upholsterer	18.04
11000 - General Services And Support Occupations	
11030 - Cleaner Vehicles	9.35
11060 - Elevator Operator	9.54
11090 - Gardener	13.00
11122 - Housekeeping Aide	9.54
11150 - Janitor	9.54
11210 - Laborer Grounds Maintenance	9.82
11240 - Maid or Houseman	9.32
11260 - Pruner	8.79
11270 - Tractor Operator	11.90
11330 - Trail Maintenance Worker	9.82
11360 - Window Cleaner	10.66
12000 - Health Occupations	
12010 - Ambulance Driver	18.23
12011 - Breath Alcohol Technician	18.23
12012 - Certified Occupational Therapist Assistant	25.01
12015 - Certified Physical Therapist Assistant	25.01
12020 - Dental Assistant	16.32
12025 - Dental Hygienist	36.12
12030 - EKG Technician	25.99

12035 - Electroneurodiagnostic Technologist		25.99
12040 - Emergency Medical Technician		18.23
12071 - Licensed Practical Nurse I		16.30
12072 - Licensed Practical Nurse II		18.23
12073 - Licensed Practical Nurse III		20.32
12100 - Medical Assistant		12.26
12130 - Medical Laboratory Technician		18.82
12160 - Medical Record Clerk		13.61
12190 - Medical Record Technician		17.77
12195 - Medical Transcriptionist		16.30
12210 - Nuclear Medicine Technologist		40.06
12221 - Nursing Assistant I		11.34
12222 - Nursing Assistant II		12.75
12223 - Nursing Assistant III		13.91
12224 - Nursing Assistant IV		15.61
12235 - Optical Dispenser		18.23
12236 - Optical Technician		16.30
12250 - Pharmacy Technician		15.49
12280 - Phlebotomist		16.30
12305 - Radiologic Technologist		25.33
12311 - Registered Nurse I		23.18
12312 - Registered Nurse II		28.36
12313 - Registered Nurse II Specialist		28.36
12314 - Registered Nurse III		34.32
12315 - Registered Nurse III Anesthetist		34.32
12316 - Registered Nurse IV		41.13
12317 - Scheduler (Drug and Alcohol Testing)		22.58
12320 - Substance Abuse Treatment Counselor		22.58
13000 - Information And Arts Occupations		
13011 - Exhibits Specialist I		21.20
13012 - Exhibits Specialist II		26.27
13013 - Exhibits Specialist III		32.13
13041 - Illustrator I		21.20
13042 - Illustrator II		26.27
13043 - Illustrator III		32.13
13047 - Librarian		29.09
13050 - Library Aide/Clerk		16.88
13054 - Library Information Technology Systems Administrator		26.27
13058 - Library Technician		16.64
13061 - Media Specialist I		18.96
13062 - Media Specialist II		21.20
13063 - Media Specialist III		23.63
13071 - Photographer I		18.96
13072 - Photographer II		21.20
13073 - Photographer III		26.27
13074 - Photographer IV		32.13
13075 - Photographer V		38.88
13090 - Technical Order Library Clerk		21.20
13110 - Video Teleconference Technician		18.96
14000 - Information Technology Occupations		
14041 - Computer Operator I		15.71
14042 - Computer Operator II		17.22
14043 - Computer Operator III		19.19
14044 - Computer Operator IV		21.33
14045 - Computer Operator V		23.62
14071 - Computer Programmer I	(see 1)	15.73
14072 - Computer Programmer II	(see 1)	19.50
14073 - Computer Programmer III	(see 1)	23.84
14074 - Computer Programmer IV	(see 1)	
14101 - Computer Systems Analyst I	(see 1)	24.23
14102 - Computer Systems Analyst II	(see 1)	
14103 - Computer Systems Analyst III	(see 1)	
14150 - Peripheral Equipment Operator		15.71
14160 - Personal Computer Support Technician		21.33

14170 - System Support Specialist	21.24
15000 - Instructional Occupations	
15010 - Aircrew Training Devices Instructor (Non-Rated)	24.23
15020 - Aircrew Training Devices Instructor (Rated)	29.32
15030 - Air Crew Training Devices Instructor (Pilot)	34.91
15050 - Computer Based Training Specialist / Instructor	24.23
15060 - Educational Technologist	27.61
15070 - Flight Instructor (Pilot)	34.91
15080 - Graphic Artist	20.47
15085 - Maintenance Test Pilot Fixed Jet/Prop	34.91
15086 - Maintenance Test Pilot Rotary Wing	34.91
15088 - Non-Maintenance Test/Co-Pilot	34.91
15090 - Technical Instructor	17.67
15095 - Technical Instructor/Course Developer	23.78
15110 - Test Proctor	15.70
15120 - Tutor	15.70
16000 - Laundry Dry-Cleaning Pressing And Related Occupations	
16010 - Assembler	10.12
16030 - Counter Attendant	10.12
16040 - Dry Cleaner	11.56
16070 - Finisher Flatwork Machine	10.12
16090 - Presser Hand	10.12
16110 - Presser Machine Drycleaning	10.12
16130 - Presser Machine Shirts	10.12
16160 - Presser Machine Wearing Apparel Laundry	10.12
16190 - Sewing Machine Operator	12.04
16220 - Tailor	12.52
16250 - Washer Machine	10.60
19000 - Machine Tool Operation And Repair Occupations	
19010 - Machine-Tool Operator (Tool Room)	19.46
19040 - Tool And Die Maker	24.46
21000 - Materials Handling And Packing Occupations	
21020 - Forklift Operator	13.96
21030 - Material Coordinator	21.78
21040 - Material Expediter	21.78
21050 - Material Handling Laborer	11.37
21071 - Order Filler	9.76
21080 - Production Line Worker (Food Processing)	13.96
21110 - Shipping Packer	17.12
21130 - Shipping/Receiving Clerk	17.12
21140 - Store Worker I	15.22
21150 - Stock Clerk	21.40
21210 - Tools And Parts Attendant	13.96
21410 - Warehouse Specialist	13.96
23000 - Mechanics And Maintenance And Repair Occupations	
23010 - Aerospace Structural Welder	25.04
23019 - Aircraft Logs and Records Technician	19.47
23021 - Aircraft Mechanic I	23.84
23022 - Aircraft Mechanic II	25.04
23023 - Aircraft Mechanic III	26.30
23040 - Aircraft Mechanic Helper	16.58
23050 - Aircraft Painter	22.39
23060 - Aircraft Servicer	19.47
23070 - Aircraft Survival Flight Equipment Technician	22.39
23080 - Aircraft Worker	21.03
23091 - Aircrew Life Support Equipment (ALSE) Mechanic I	21.03
23092 - Aircrew Life Support Equipment (ALSE) Mechanic II	23.84
23110 - Appliance Mechanic	19.46
23120 - Bicycle Repairer	15.61
23125 - Cable Splicer	19.59
23130 - Carpenter Maintenance	16.07
23140 - Carpet Layer	18.20
23160 - Electrician Maintenance	18.05

23181 - Electronics Technician Maintenance I	18.20
23182 - Electronics Technician Maintenance II	19.46
23183 - Electronics Technician Maintenance III	20.72
23260 - Fabric Worker	16.94
23290 - Fire Alarm System Mechanic	16.77
23310 - Fire Extinguisher Repairer	15.61
23311 - Fuel Distribution System Mechanic	20.72
23312 - Fuel Distribution System Operator	15.61
23370 - General Maintenance Worker	12.01
23380 - Ground Support Equipment Mechanic	23.84
23381 - Ground Support Equipment Servicer	19.47
23382 - Ground Support Equipment Worker	21.03
23391 - Gunsmith I	15.61
23392 - Gunsmith II	18.20
23393 - Gunsmith III	20.72
23410 - Heating Ventilation And Air-Conditioning Mechanic	17.50
23411 - Heating Ventilation And Air Contidioning Mechanic (Research Facility)	18.61
23430 - Heavy Equipment Mechanic	19.27
23440 - Heavy Equipment Operator	17.76
23460 - Instrument Mechanic	20.72
23465 - Laboratory/Shelter Mechanic	19.46
23470 - Laborer	11.37
23510 - Locksmith	19.46
23530 - Machinery Maintenance Mechanic	23.13
23550 - Machinist Maintenance	20.72
23580 - Maintenance Trades Helper	10.67
23591 - Metrology Technician I	20.72
23592 - Metrology Technician II	22.03
23593 - Metrology Technician III	23.33
23640 - Millwright	20.72
23710 - Office Appliance Repairer	19.46
23760 - Painter Maintenance	14.08
23790 - Pipefitter Maintenance	18.39
23810 - Plumber Maintenance	17.27
23820 - Pneudraulic Systems Mechanic	20.72
23850 - Rigger	20.72
23870 - Scale Mechanic	18.20
23890 - Sheet-Metal Worker Maintenance	17.35
23910 - Small Engine Mechanic	18.20
23931 - Telecommunications Mechanic I	19.76
23932 - Telecommunications Mechanic II	21.01
23950 - Telephone Lineman	18.24
23960 - Welder Combination Maintenance	18.31
23965 - Well Driller	21.13
23970 - Woodcraft Worker	20.71
23980 - Woodworker	15.61
24000 - Personal Needs Occupations	
24550 - Case Manager	15.01
24570 - Child Care Attendant	10.09
24580 - Child Care Center Clerk	13.25
24610 - Chore Aide	12.78
24620 - Family Readiness And Support Services Coordinator	15.01
24630 - Homemaker	16.12
25000 - Plant And System Operations Occupations	
25010 - Boiler Tender	20.72
25040 - Sewage Plant Operator	21.59
25070 - Stationary Engineer	20.72
25190 - Ventilation Equipment Tender	14.29
25210 - Water Treatment Plant Operator	21.59
27000 - Protective Service Occupations	
27004 - Alarm Monitor	10.90
27007 - Baggage Inspector	9.48

27008 - Corrections Officer	
27010 - Court Security Officer	12.05
27030 - Detection Dog Handler	12.05
27040 - Detention Officer	10.90
27070 - Firefighter	12.05
27101 - Guard I	12.05
27102 - Guard II	9.48
27131 - Police Officer I	10.90
27132 - Police Officer II	12.05
28000 - Recreation Occupations	13.40
28041 - Carnival Equipment Operator	
28042 - Carnival Equipment Repairer	13.24
28043 - Carnival Worker	14.46
28210 - Gate Attendant/Gate Tender	9.78
28310 - Lifeguard	13.18
28350 - Park Attendant (Aide)	11.01
28510 - Recreation Aide/Health Facility Attendant	14.74
28515 - Recreation Specialist	11.84
28630 - Sports Official	18.26
28690 - Swimming Pool Operator	11.74
29000 - Stevedoring/Longshoremen Occupational Services	17.71
29010 - Blocker And Bracer	
29020 - Hatch Tender	25.98
29030 - Line Handler	25.98
29041 - Stevedore I	25.98
29042 - Stevedore II	24.18
30000 - Technical Occupations	27.79
30010 - Air Traffic Control Specialist Center (HFO) (see 2)	40.29
30011 - Air Traffic Control Specialist Station (HFO) (see 2)	27.78
30012 - Air Traffic Control Specialist Terminal (HFO) (see 2)	30.59
30021 - Archeological Technician I	17.49
30022 - Archeological Technician II	19.56
30023 - Archeological Technician III	24.21
30030 - Cartographic Technician	23.18
30040 - Civil Engineering Technician	23.08
30051 - Cryogenic Technician I	25.57
30052 - Cryogenic Technician II	28.24
30061 - Drafter/CAD Operator I	17.49
30062 - Drafter/CAD Operator II	19.56
30063 - Drafter/CAD Operator III	20.77
30064 - Drafter/CAD Operator IV	25.57
30081 - Engineering Technician I	14.84
30082 - Engineering Technician II	16.66
30083 - Engineering Technician III	18.64
30084 - Engineering Technician IV	23.08
30085 - Engineering Technician V	28.24
30086 - Engineering Technician VI	34.16
30090 - Environmental Technician	23.08
30095 - Evidence Control Specialist	23.08
30210 - Laboratory Technician	20.77
30221 - Latent Fingerprint Technician I	25.57
30222 - Latent Fingerprint Technician II	28.24
30240 - Mathematical Technician	23.34
30361 - Paralegal/Legal Assistant I	19.54
30362 - Paralegal/Legal Assistant II	24.21
30363 - Paralegal/Legal Assistant III	29.61
30364 - Paralegal/Legal Assistant IV	35.83
30375 - Petroleum Supply Specialist	28.24
30390 - Photo-Optics Technician	21.93
30395 - Radiation Control Technician	28.24
30461 - Technical Writer I	23.08
30462 - Technical Writer II	28.24
30463 - Technical Writer III	34.16
30491 - Unexploded Ordnance (UXO) Technician I	25.60
30492 - Unexploded Ordnance (UXO) Technician II	30.98

30493 - Unexploded Ordnance (UXO) Technician III		37.13
30494 - Unexploded (UXO) Safety Escort		25.60
30495 - Unexploded (UXO) Sweep Personnel		25.60
30501 - Weather Forecaster I		25.57
30502 - Weather Forecaster II		31.09
30620 - Weather Observer Combined Upper Air Or Surface Programs	(see 2)	20.77
30621 - Weather Observer Senior	(see 2)	23.08
31000 - Transportation/Mobile Equipment Operation Occupations		
31010 - Airplane Pilot		30.98
31020 - Bus Aide		8.15
31030 - Bus Driver		10.66
31043 - Driver Courier		9.69
31260 - Parking and Lot Attendant		9.91
31290 - Shuttle Bus Driver		11.65
31310 - Taxi Driver		11.41
31361 - Truckdriver Light		10.59
31362 - Truckdriver Medium		11.61
31363 - Truckdriver Heavy		14.64
31364 - Truckdriver Tractor-Trailer		14.64
99000 - Miscellaneous Occupations		
99020 - Cabin Safety Specialist		15.10
99030 - Cashier		9.63
99050 - Desk Clerk		9.70
99095 - Embalmer		25.60
99130 - Flight Follower		25.60
99251 - Laboratory Animal Caretaker I		23.38
99252 - Laboratory Animal Caretaker II		25.54
99260 - Marketing Analyst		21.54
99310 - Mortician		25.60
99410 - Pest Controller		14.61
99510 - Photofinishing Worker		13.45
99710 - Recycling Laborer		17.32
99711 - Recycling Specialist		23.38
99730 - Refuse Collector		16.40
99810 - Sales Clerk		9.87
99820 - School Crossing Guard		17.27
99830 - Survey Party Chief		23.01
99831 - Surveying Aide		13.08
99832 - Surveying Technician		17.00
99840 - Vending Machine Attendant		23.38
99841 - Vending Machine Repairer		29.78
99842 - Vending Machine Repairer Helper		23.38

Note: Executive Order (EO) 13706 Establishing Paid Sick Leave for Federal Contractors applies to all contracts subject to the Service Contract Act for which the contract is awarded (and any solicitation was issued) on or after January 1 2017. If this contract is covered by the EO the contractor must provide employees with 1 hour of paid sick leave for every 30 hours they work up to 56 hours of paid sick leave each year. Employees must be permitted to use paid sick leave for their own illness injury or other health-related needs including preventive care; to assist a family member (or person who is like family to the employee) who is ill injured or has other health-related needs including preventive care; or for reasons resulting from or to assist a family member (or person who is like family to the employee) who is the victim of domestic violence sexual assault or stalking. Additional information on contractor requirements and worker protections

under the EO is available at www.dol.gov/whd/govcontracts.

ALL OCCUPATIONS LISTED ABOVE RECEIVE THE FOLLOWING BENEFITS:

HEALTH & WELFARE: $4.60 per hour up to 40 hours per week or $184.00 per week or $797.33 per month

HEALTH & WELFARE EO 13706: $4.23 per hour up to 40 hours per week or $169.20 per week or $733.20 per month*

*This rate is to be used only when compensating employees for performance on an SCA-covered contract also covered by EO 13706 Establishing Paid Sick Leave for Federal Contractors. A contractor may not receive credit toward its SCA obligations for any paid sick leave provided pursuant to EO 13706.

VACATION: 2 weeks paid vacation after 1 year of service with a contractor or successor; and 4 weeks after 3 years. Length of service includes the whole span of continuous service with the present contractor or successor wherever employed and with the predecessor contractors in the performance of similar work at the same Federal facility. (Reg. 29 CFR 4.173)

HOLIDAYS: A minimum of ten paid holidays per year: New Year's Day Martin Luther King Jr.'s Birthday Washington's Birthday Memorial Day Independence Day Labor Day Columbus Day Veterans' Day Thanksgiving Day and Christmas Day. (A contractor may substitute for any of the named holidays another day off with pay in accordance with a plan communicated to the employees involved.) (See 29 CFR 4.174)

THE OCCUPATIONS WHICH HAVE NUMBERED FOOTNOTES IN PARENTHESES RECEIVE THE FOLLOWING:

1) COMPUTER EMPLOYEES: Under the SCA at section 8(b) this wage determination does not apply to any employee who individually qualifies as a bona fide executive administrative or professional employee as defined in 29 C.F.R. Part 541. Because most Computer System Analysts and Computer Programmers who are compensated at a rate not less than $27.63 (or on a salary or fee basis at a rate not less than $455 per week) an hour would likely qualify as exempt computer professionals (29 C.F.R. 541. 400) wage rates may not be listed on this wage determination for all occupations within those job families. In addition because this wage determination may not list a wage rate for some or all occupations within those job families if the survey data indicates that the prevailing wage rate for the occupation equals or exceeds $27.63 per hour conformances may be necessary for certain nonexempt employees. For example if an individual employee is nonexempt but nevertheless performs duties within the scope of one of the Computer Systems Analyst or Computer Programmer occupations for which this wage determination does not specify an SCA wage rate then the wage rate for that employee must be conformed in accordance with the conformance procedures described in the conformance note included on this wage

determination.

Additionally because job titles vary widely and change quickly in the computer industry job titles are not determinative of the application of the computer professional exemption. Therefore the exemption applies only to computer employees who satisfy the compensation requirements and whose primary duty consists of:

(1) The application of systems analysis techniques and procedures including consulting with users to determine hardware software or system functional specifications;

(2) The design development documentation analysis creation testing or modification of computer systems or programs including prototypes based on and related to user or system design specifications;

(3) The design documentation testing creation or modification of computer programs related to machine operating systems; or

(4) A combination of the aforementioned duties the performance of which requires the same level of skills. (29 C.F.R. 541.400).

2) AIR TRAFFIC CONTROLLERS AND WEATHER OBSERVERS - NIGHT PAY & SUNDAY PAY: If you work at night as part of a regular tour of duty you will earn a night differential and receive an additional 10% of basic pay for any hours worked between 6pm and 6am. If you are a full-time employed (40 hours a week) and Sunday is part of your regularly scheduled workweek you are paid at your rate of basic pay plus a Sunday premium of 25% of your basic rate for each hour of Sunday work which is not overtime (i.e. occasional work on Sunday outside the normal tour of duty is considered overtime work).

** HAZARDOUS PAY DIFFERENTIAL **

An 8 percent differential is applicable to employees employed in a position that represents a high degree of hazard when working with or in close proximity to ordnance explosives and incendiary materials. This includes work such as screening blending dying mixing and pressing of sensitive ordnance explosives and pyrotechnic compositions such as lead azide black powder and photoflash powder. All dry-house activities involving propellants or explosives. Demilitarization modification renovation demolition and maintenance operations on sensitive ordnance explosives and incendiary materials. All operations involving re-grading and cleaning of artillery ranges.

A 4 percent differential is applicable to employees employed in a position that represents a low degree of hazard when working with or in close proximity to ordnance (or employees possibly adjacent to) explosives and incendiary materials which involves potential injury such as laceration of hands face or arms of the employee engaged in the operation irritation of the skin minor burns and the like; minimal damage to immediate or adjacent work area or equipment being used. All operations involving unloading storage and hauling of ordnance explosive and incendiary ordnance material other than small arms ammunition. These differentials are only applicable to work that has been specifically designated by the agency for ordnance explosives and incendiary material differential pay.

** UNIFORM ALLOWANCE **

If employees are required to wear uniforms in the performance of this contract (either by the terms of the Government contract by the employer by the state or local law etc.) the cost of furnishing such uniforms and maintaining (by laundering or dry cleaning) such uniforms is an expense that may not be borne by an employee where such cost reduces the hourly rate below that required by the wage determination. The Department of Labor will accept payment in accordance with the following standards as compliance:

The contractor or subcontractor is required to furnish all employees with an adequate number of uniforms without cost or to reimburse employees for the actual cost of the uniforms. In addition where uniform cleaning and maintenance is made the responsibility of the employee all contractors and subcontractors subject to this wage determination shall (in the absence of a bona fide collective bargaining agreement providing for a different amount or the furnishing of contrary affirmative proof as to the actual cost) reimburse all employees for such cleaning and maintenance at a rate of $3.35 per week (or $.67 cents per day). However in those instances where the uniforms furnished are made of ""wash and wear"" materials may be routinely washed and dried with other personal garments and do not require any special treatment such as dry cleaning daily washing or commercial laundering in order to meet the cleanliness or appearance standards set by the terms of the Government contract by the contractor by law or by the nature of the work there is no requirement that employees be reimbursed for uniform maintenance costs.

** SERVICE CONTRACT ACT DIRECTORY OF OCCUPATIONS **

The duties of employees under job titles listed are those described in the ""Service Contract Act Directory of Occupations"" Fifth Edition (Revision 1) dated September 2015 unless otherwise indicated.

** REQUEST FOR AUTHORIZATION OF ADDITIONAL CLASSIFICATION AND WAGE RATE Standard Form 1444 (SF-1444) **

Conformance Process:

The contracting officer shall require that any class of service employee which is not listed herein and which is to be employed under the contract (i.e. the work to be performed is not performed by any classification listed in the wage determination) be classified by the contractor so as to provide a reasonable relationship (i.e. appropriate level of skill comparison) between such unlisted classifications and the classifications listed in the wage determination (See 29 CFR 4.6(b)(2)(i)). Such conforming procedures shall be initiated by the contractor prior to the performance of contract work by such unlisted class(es) of employees (See 29 CFR 4.6(b)(2)(ii)). The Wage and Hour Division shall make a final determination of conformed classification wage rate and/or fringe benefits which shall be paid to all employees performing in the classification from the first day of work on which contract work is performed by them in the classification. Failure to pay such unlisted employees the compensation agreed upon by the interested

parties and/or fully determined by the Wage and Hour Division retroactive to the date such class of employees commenced contract work shall be a violation of the Act and this contract. (See 29 CFR 4.6(b)(2)(v)). When multiple wage determinations are included in a contract a separate SF-1444 should be prepared for each wage determination to which a class(es) is to be conformed.

The process for preparing a conformance request is as follows:

1) When preparing the bid the contractor identifies the need for a conformed occupation(s) and computes a proposed rate(s).

2) After contract award the contractor prepares a written report listing in order the proposed classification title(s) a Federal grade equivalency (FGE) for each proposed classification(s) job description(s) and rationale for proposed wage rate(s) including information regarding the agreement or disagreement of the authorized representative of the employees involved or where there is no authorized representative the employees themselves. This report should be submitted to the contracting officer no later than 30 days after such unlisted class(es) of employees performs any contract work.

3) The contracting officer reviews the proposed action and promptly submits a report of the action together with the agency's recommendations and pertinent information including the position of the contractor and the employees to the U.S. Department of Labor Wage and Hour Division for review (See 29 CFR 4.6(b)(2)(ii)).

4) Within 30 days of receipt the Wage and Hour Division approves modifies or disapproves the action via transmittal to the agency contracting officer or notifies the contracting officer that additional time will be required to process the request.

5) The contracting officer transmits the Wage and Hour Division's decision to the contractor.

6) Each affected employee shall be furnished by the contractor with a written copy of such determination or it shall be posted as a part of the wage determination (See 29 CFR 4.6(b)(2)(iii)).

Information required by the Regulations must be submitted on SF-1444 or bond paper.

When preparing a conformance request the ""Service Contract Act Directory of Occupations"" should be used to compare job definitions to ensure that duties requested are not performed by a classification already listed in the wage determination. Remember it is not the job title but the required tasks that determine whether a class is included in an established wage determination. Conformances may not be used to artificially split combine or subdivide classifications listed in the wage determination (See 29 CFR 4.152(c)(1))."

2022

CONTRACTOR'S LICENSE

LOU LEON GUERRERO
Governor of Guam

JOSH TENORIO
Lt Governor of Guam

Pursuant to the provisions of Chapter VII Title XI of the Government of Guam and the Rules and Regulations of the Contractors License Board, the Executive Director of Contractors hereby issues this license to:

Antonio C. Menodoza III
dba: Tony's Workshop

To engage in the business or act in the capacity of a contractor in the following classifications

A,B,C40 & C51

This license is the property of the Executive Director of Contractors, not transferable, and shall be returned to the Executive Director upon demand when suspended, revoked, or invalidated for any reason. It becomes void if not renewed on or before the expiration date.

Signature of RME
RME #

Signature of LICENSEE
License # 6632

GRT # 941288
Issued: June 11, 2021

Certificate # C-0621-0440
Expires: June 30, 2022

JAMES M. CASALLO
CLB BOARD CHAIRMAN

CECIL "BUDDY" L. ORSINI
EXECUTIVE DIRECTOR

SUBMITTAL

Project

HA-1702-21-11 UOG IFB B21-17 PURCHASING HVAC EQUIP

Date

Wednesday, December 1, 2021

Project Number

HA-1702-21-11

Contractor

UNIVERSITY OF GUAM - PROCUREMENT OFFICE

BERNARD LLARENAS
CARRIER GUAM INC.

Table Of Contents

Project: HA-1702-21-11 UOG IFB B21-17 PURCHASING HVAC EQUIP
Prepared By: BERNARD LLARENAS

02:16PM

Table Of Contents

RFK BUILDING SECOND FLOOR 112221

Submittal Cover Sheet
Unit Report
Performance Summary Report
Acoustic Summary
Certified Drawings
Guide Specifications
Feature Sheet

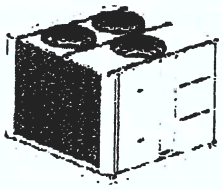

Outdoor Unit Parameters

Unit Quantity	1	
Unit Model	38APD	
Unit Size	50 Tons	
Voltage	208-3-60	V-Ph-Hz
No of Circuits	Two Circuits	

System Parameter

System Quantity	1	
Refrigerant Type	PURON	
Compressor Quantity	2 (Circ A), 2 (Circ B)	
Compressor Type	Scroll	
Std Capacity Steps	23, 50, 73, 100	
Std Min Outdoor Temp(Cooling)	25.0	°F
No of Outdoor fans	3	

Outdoor Unit Dimensions and Weight

Unit Length	7' 8.1"	
Unit Width	7' 4.2"	
Unit Height	6' 1.0"	
Unit Operating Weight	2120	lb

Warranty Information Outdoor (Note: for US & Canada only)

First Year - Parts Only (Standard)

NOTE: Please see Warranty Catalog 808-218 for explanation of policies and ordering methods.

Ordering Information

Part Number	Description	Quantity
Base Unit - Outdoor		
38APD05056-3009J		
	Base Unit	1
	Standard Line Length, RTPF	
	Single Point Power, Terminal Block	1
	Export packaging, (Skid + Bag)	1
	Scrolling Marquee, EMM, BACnet Communication	1
	Copper E-Coat Fin / Copper Tube	1
Accessories		1
33CS2PP2S-03	Thermostat for Outdoor Unit	
30GT-911---062	Navigator for Outdoor Unit	1
		1

System:

No. of Stages	**38APD050**	
System Quantity	**Dual Stage**	
Altitude:	**1**	
EER @ ARI Conditions	**600.0**	ft
EER @ Ambient Conditions	**11.1**	
IPLV:	**10.2**	
Capacity Split Percentage (A ckt/B ckt)	**14.9**	
Suction Line Loss:	**48/52**	%
Condensing unit is rated in accordance with ARI 365	**2.0**	°F

Typical Liquid and Suction Line Sizing

Pipe Length	Liquid Line Size	Suction Line Size
0 - 25	5/8 (A), 5/8 (B)	1 3/8 (A), 1 3/8 (B)
26 - 50	5/8 (A), 7/8 (B)	1 5/8 (A), 1 5/8 (B)
51 - 75	7/8 (A), 7/8 (B)	1 5/8 (A), 1 5/8 (B)
76 - 100	7/8 (A), 7/8 (B)	1 5/8 (A), 2 1/8 (B)
101 - 125	7/8 (A), 7/8 (B)	2 1/8 (A), 2 1/8 (B)
126 - 150	7/8 (A), 7/8 (B)	2 1/8 (A), 2 1/8 (B)
151 - 175	7/8 (A), 7/8 (B)	2 1/8 (A), 2 1/8 (B)
176 - 200	7/8 (A), 7/8 (B)	2 1/8 (A), 2 1/8 (B)

Do NOT exceed 200 ft max linear separation or 75 ft vertical liquid lift. Oil management is critical on split systems for compressor reliability. Refrigerant circuit warranty may be void beyond these limits.

Liquid Line Sizing

Pipe Length	Liquid Line Size
0 - 25	5/8 (A), 5/8 (B)
26 - 50	5/8 (A), 7/8 (B)
51 - 75	7/8 (A), 7/8 (B)
76 - 100	7/8 (A), 7/8 (B)
101 - 125	7/8 (A), 7/8 (B)
126 - 150	7/8 (A), 7/8 (B)
151 - 175	7/8 (A), 7/8 (B)
176 - 200	7/8 (A), 7/8 (B)

Suction Line Sizing

Pipe Length	Suction Line Size
0 - 25	1 3/8 (A), 1 3/8 (B)
26 - 50	1 5/8 (A), 1 5/8 (B)
51 - 75	1 5/8 (A), 1 5/8 (B)
76 - 100	1 5/8 (A), 2 1/8 (B)
101 - 125	2 1/8 (A), 2 1/8 (B)
126 - 150	2 1/8 (A), 2 1/8 (B)
151 - 175	2 1/8 (A), 2 1/8 (B)
176 - 200	2 1/8 (A), 2 1/8 (B)

Dual suction riser may be required, refer to PD.

Outdoor Unit Parameters

Unit Quantity:	**1**	
PartNumber:	**38APD05056-3009J**	
Unit Model:	**38APD**	
Unit Size:	**50 Tons**	
Voltage:	**208-3-60**	V-Ph-Hz
Total Clg Cap.(Gross):	**576.8**	MBH

SDT:	127.9	°F
SDT2:	131.2	°F
SCT:	127.8	°F
SCT2:	131.1	°F
Clg Ent Air DB	95.0	°F
Saturated Suction Temp:	45.0	°F

38AP units are not designed for Refrigeration Duty. Unit operational range should be reviewed to ensure that operation at full and part load conditions with Saturated Suction Temperatures at or below 30 F are avoided. Operation below 30 F SST may result in ice build-up on evaporator coil resulting in liquid flood-back and possible compressor failure. Return/Mixed Air Temperature should not be below 55F. If the customer requires differently, please contact application engineering.

Outdoor Electrical Data

Unit Voltage	208-3-60	V-Ph-Hz
Unit MCA	231.4	Amps
Unit MOCP	250.0	Amps
Compressor Power	52.30	kW
Voltage Range Min	187	V
Voltage Range Max	254	V
Compressor RLA:	48.1/51.3	
Compressor LRA:	245/300	
Compressor Quantity	2 (Circ A), 2 (Circ B)	
Fan Motors Qty.	3	
Fan Motor FLA	NA	Amps
Notice Outdoor unit elect data is based on 208-3-60		

FIOPS and Accessories Information

FIOPS	Quantity
Standard Line Length, RTPF	1
Export packaging, (Skid + Bag)	1
Scrolling Marquee, EMM, BACnet Communication	1
Accessories	**Quantity**
Thermostat for Outdoor Unit	1
Navigator for Outdoor Unit	1

Liquid line check valve(s) prevent charge migration to compressor. These valves may be required for certain applications, refer to PD.

Acoustic Information

A-Wgt Outdoor Sound Power Level 96.7 dbA

Acoustic Notes:

1 The acoustic center of the unit is located at the geometric center of the unit.
2 All estimated sound power levels, dB re 1 Pico watt should not be guaranteed or certified as being the actual sound power levels

Advanced Acoustics Parameters

1. Unit height above ground: **1.0** ft
2. Horizontal distance from unit to receiver: **20.0** ft
3. Receiver height above ground: **5.7** ft
4. Height of obstruction: **0.0** ft
5. Horizontal dist. from obstruction to receiver: **0.0** ft
6. Horizontal dist. from unit to obstruction: **0.0** ft

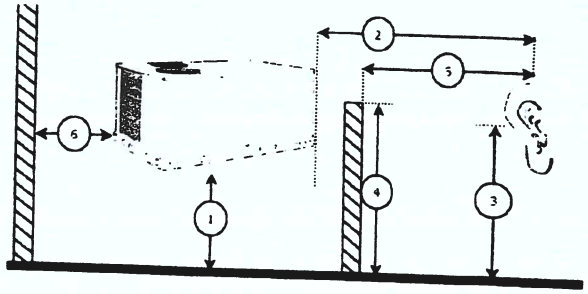

Detailed Acoustics Information

Octave Band Center Frequency, Hz	31	63	125	250	500	1k	2k	4k	8k	Ov
Sound Power Levels at Unit's Acoustic Center (Lw), dB	78	98	95	94	95	92	88	85	82	10
A-Wgted Sound Power Levels at Unit's Acoustic Center (LwA), dBA	39	72	79	86	91	92	90	86	81	97
Sound Press. Levels at Dist. Specified above (Lp), dB	53	73	70	69	69	66	63	60	57	78
A-Wgted Sound Press. Levels at Dist. Specified above (LpA), dBA	14	47	54	61	66	66	64	61	56	72

Calculation methods used in this program are patterned after the ASHRAE Guide, other ASHRAE Publications and the AHRI Acoustical Standards. While a very significant effort has been made to insure the technical accuracy of this program, it is assumed that the user is knowledgeable in the art of system sound estimation and is aware of the tolerances involved in real world acoustical estimation. This program makes certain assumptions as to the dominant sound sources and sound paths which may not always be appropriate to the real system being estimated. Because of this, no assurances can be offered that this software will always generate an accurate sound prediction from user supplied input data. If in doubt about the estimation of expected sound levels in a space, an Acoustical Engineer or a person with sound prediction expertise should be consulted.

Outdoor Unit Parameters:

Tag Name **RFK BUILDING SECOND FLOOR 112221**
Unit Model **38APD**
Unit Size **50 Tons**
System Type **Dx Cooling Only**
Refrigerant Type **PURON**
Compressor Quantity **2 (Circ A), 2 (Circ B)**
Compressor Type **Scroll**

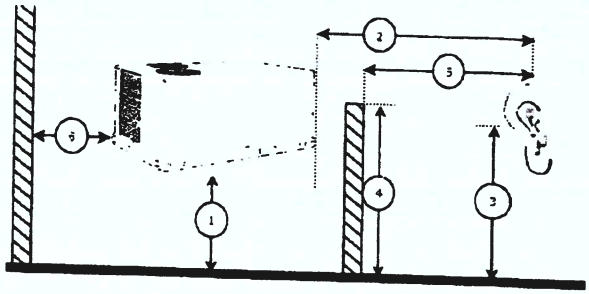

Advanced Accoustics Parameters

1. Unit height above ground **1.0** ft
2. Horizontal distance from unit to receiver **20.0** ft
3. Receiver height above ground **5.7** ft
4. Height of obstruction **0.0** ft
5. Horizontal distance from obstruction to receiver **0.0** ft
6. Horizontal distance from unit to obstruction **0.0** ft

Detailed Acoustics Information

Octave Band Center Frequency, Hz	31	63	125	250	500	1k	2k	4k	8k	Ov
Sound Power Levels at Unit's Acoustic Center (Lw) dB	78	98	95	94	95	92	88	85	82	10
A-Wgted Sound Power Levels at Unit's Acoustic Center (LwA) dBA	39	72	79	86	91	92	90	86	81	97
Sound Press. Levels at Dist. Specified above (Lp) dB	53	73	70	69	69	66	63	60	57	78
A-Wgted Sound Press Levels at Dist Specified above (LpA), dBA	14	47	54	61	66	66	64	61	56	72

Calculation methods used in this program are patterned after the ASHRAE Guide, other ASHRAE Publications and the AHRI Acoustical Standards While a very significant effort has been made to insure the technical accuracy of this program, it is assumed that the user is knowledgeable in the art of system sound estimation and is aware of the tolerances involved in real world acoustical estimation This program makes certain assumptions as to the dominant sound sources and sound paths which may not always be appropriate to the real system being estimated Because of this, no assurances can be offered that this software will always generate an accurate sound prediction from user supplied input data. If in doubt about the estimation of expected sound levels in a space an Acoustical Engineer or a person with sound prediction expertise should be consulted.

Acoustic Note:

1. Estimated Sound Power levels - dB re. 1 picowatt
2. Estimated Sound Pressure levels - dB re 20 micropascal
3. Estimated sound levels given above are assumed to originate at the acoustic center of the unit The acoustic center of the unit is located at the projection of the condensing unit's geometric center of its base.

4. Sound power levels shown above were determined in accordance with ARI standard 370 for large outdoor refrigeration and air conditioning equipment.

5. Calculation methods used in this program are patterned after the ASHRAE Guide; other ASHRAE Publications and the ARI Acoustical Standards While a very significant effort has been made to insure the technical accuracy of this program, it is assumed that the user is knowledgeable in the art of system sound estimation and is aware of the tolerances involved in real world acoustical estimation. This program makes certain assumptions as to the dominant sound sources and sound paths which may not always be appropriate to the real system being estimated Because of this, no assurances can be offered that this software will always generate an accurate sound prediction from user supplied input data. If in doubt about the estimation of expected sound levels in a space, an Acoustical Engineer or a person with sound prediction expertise should be consulted.

Certified Drawing for RFK BUILDING SECOND FLOOR 112221

Project: HA-1702-21-11 UOG IFB B21-17 PURCHASING HVAC EQUIP
Prepared By: BERNARD LLARENAS

12/01/20
02:16

NOTES

1. BE SURE TO USE A WET RAG AND REMOVE ALL VALVE CORES BEFORE BRAZING FIELD PIPING.
2. DO NOT CAP OR OTHERWISE OBSTRUCT THE LIQUID LINE TEMPERATURE RELIEF
3. Ø7/8 [22.4] PILOT HOLE PROVIDED FOR LOCATING FIELD POWER WIRING ACTUAL HOLE REQUIRED DEPENDS ON FIELD WIRE SIZING
4. Ø0.437 [11.10] HOLE USED FOR MOUNTING UNIT
5. UNIT MUST HAVE CLEARANCES AS FOLLOWS
   TOP - DO NOT RESTRICT
   COIL END - 42 [1067] FROM SOLID SURFACE
   PANEL SIDE - 48 [1219] PER NEC
6. SEE TABLE COLUMN H: DIMENSION FOR STANDARD AND LOW SOUND WITH STACK FAN OPTION
7. CARRIER DOES NOT RECOMMEND INSTALLATION IN A PIT
8. UNIT CAN BE HANDLED USING THE FORK TRUCK LIFT POCKETS
9. DIMENSIONS SHOWN IN INCHES[MM]
10. SIZES 040 AND 050 UNITS HAVE 3 CONDENSER FANS.SIZE 060 UNITS HAVE 4 CONDENSER FANS
11. WEIGHT DOES NOT INCLUDE REFRIGERANT CHANGE
12. FOR 38APS PIPING,REFER TO 'CIRCUIT A LIQUID CONNECTION' AND 'CIRCUIT A SUCTION CONNECTION' DIMENSIONS SHOWN

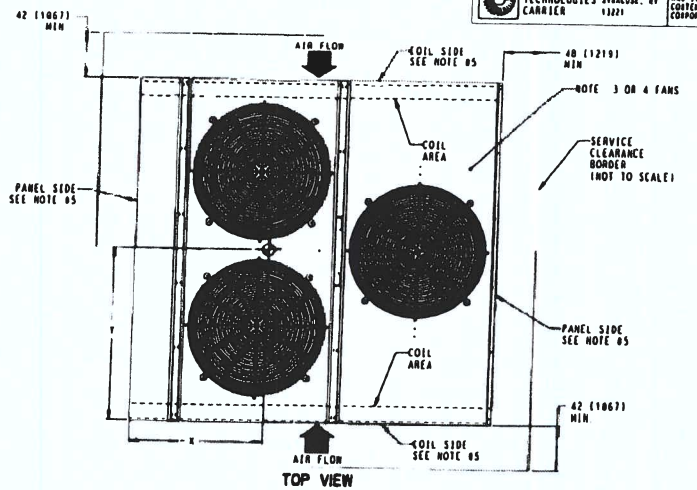

TOP VIEW

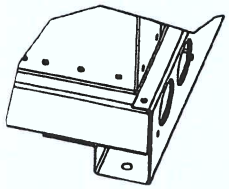

DETAIL A

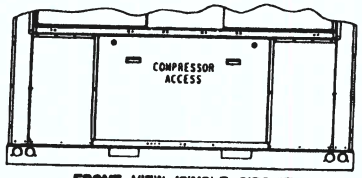

FRONT VIEW (SINGLE CIRCUIT)

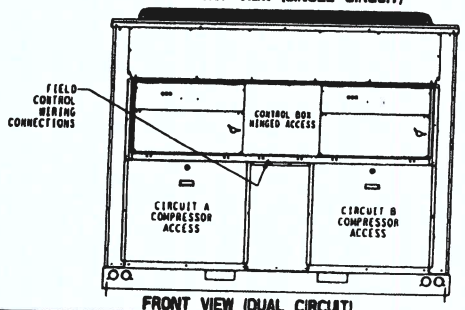

FRONT VIEW (DUAL CIRCUIT)

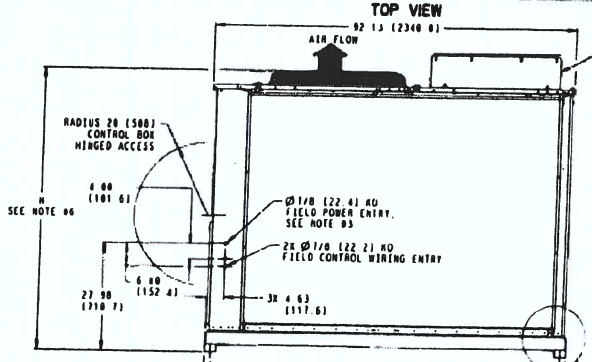

RIGHT SIDE VIEW

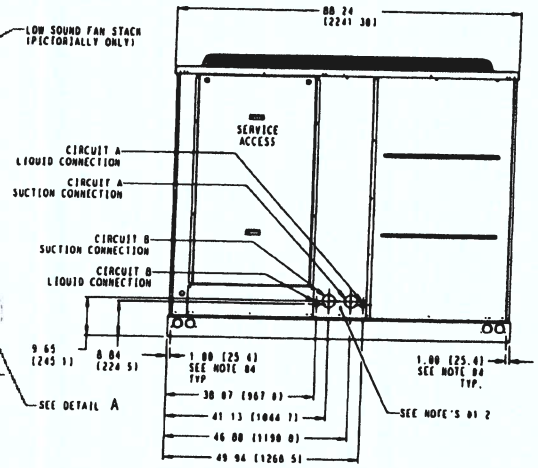

REAR VIEW

	UNIT	STD. UNIT WT. LBS.	STD. UNIT WT. KG.	CENTER OF GRAVITY X	CENTER OF GRAVITY Y	UNIT HEIGHT H	SERVICE VALVE CONNECTIONS SUCTION	SERVICE VALVE CONNECTIONS LIQUID
STANDARD	38APS040	1968	893	35.0 [889]	44.0 [1118]	73.0 [1854]	2-1/8 [54]	7/8 [22]
	38APD040	2094	950	33.7 [856]	44.1 [1120]		1-5/8 [41]	5/8 [16]
	38APS050	1977	897	34.9 [886]	44.0 [1118]		2-1/8 [54]	7/8 [22]
	38APD050	2120	961	33.4 [848]	44.1 [1120]		1-5/8 [41]	5/8 [16]
	38APD060	2227	1010	34.4 [874]	44.1 [1120]		1-5/8 [41]	5/8 [16]
LOW SOUND	38APS040	2022	917	35.0 [889]	44.0 [1118]	78.5 [1994]	2-1/8 [54]	7/8 [22]
	38APD040	2140	974	33.7 [856]	44.1 [1120]		1-5/8 [41]	5/8 [16]
	38APS050	2031	921	34.9 [886]	44.0 [1118]		2-1/8 [54]	7/8 [22]
	38APD050	2174	986	33.4 [848]	44.1 [1120]		1-5/8 [41]	5/8 [16]
	38APD060	2299	1043	34.4 [874]	44.1 [1120]		1-5/8 [41]	5/8 [16]

DATE	SUPERCEDES			REV
04/09/12	F	38AP040-060 UNIT ASSY	38AP555556	G

GUIDE SPECIFICATIONS – 38APD05056-3009J

HVAC Guide Specifications
Commercial Air-Cooled Condensing Units with Puron® Refrigerant (R-410A)

Size: 050

Part 1: General

SYSTEM DESCRIPTION

1.01. Outdoor-mounted, air-cooled condensing unit with Puron® refrigerant (R-410A) suitable for on-the-ground or rooftop installation. The 38APD unit shall have two independent refrigeration circuits and shall consist of two, four, five or six rotary scroll compressors. Unit shall have air-cooled coils, propeller-type condenser fans, a control box, and shall discharge condenser air vertically upward as shown on certified drawings. Unit shall be used in refrigeration circuit with a central station air-handling unit or direct-expansion coils.

QUALITY ASSURANCE

1.01. Unit performance shall be rated in accordance with AHRI (Air-Conditioning, Heating, and Refrigeration Institute) Standard 365, latest edition (U.S.A).

1.02. Unit construction shall comply with latest edition of ASHRAE (American Society of Heating, Refrigerating, and Air-Conditioning Engineers) 15 Safety Code, UL 1995, and ASME (American Society of Mechanical Engineers) applicable codes (U.S.A. codes).

1.03. The management system governing the manufacturer of the product is ISO (International Organization for Standardization) 9001: 2015 certified.

1.04. Base unit shall be constructed in accordance with UL (Underwriters Laboratories) standards and CSA (Canadian Standards Association)..

1.05. Painted parts shall withstand 1000 hours in constant neutral salt spray under ASTM B117 conditions with a 1mm scribe per ASTM D1654. After test, painted parts shall show no signs of wrinkling or cracking, no loss of adhesion, no evidence of blistering, and the mean creepage shall not exceed 1/4 in. (Rating = 4 per ASTM D1654) on either side of the scribe line.

1.06. Design pressure shall be 650 psig (4482 kPa).

1.07. Unit shall be functional checked at the factory.

1.08. Lifting holes shall be provided to facilitate rigging.

DELIVERY, STORAGE, AND HANDLING

1.01. Unit shall be shipped as single package and shall be stored and handled per unit manufacturer's recommendations.

WARRANTY (FOR INCLUSION BY SPECIFYING ENGINEER)

Part 2: Products

EQUIPMENT

2.01. General:

A. Factory assembled, single-piece, air-cooled condensing unit. Contained within the unit enclosure shall be all factory wiring, piping, controls, compressors, nitrogen holding charge, and special features required prior to field start-up.

2.02. Unit Cabinet:

A. Cabinet shall be galvanized steel casing with a baked enamel powder or pre-painted finish.

B. Control box access panels shall be hinged for service access.

2.03. Fans:

A. Condenser fans shall be direct-drive propeller type, discharging air vertically upward.

B. All condenser fan motors shall be totally enclosed 3-phase type with permanently lubricated ball bearings, class F insulation and internal, automatic-reset thermal overload protection or manual reset calibrated circuit breakers.

C. Shafts shall have inherent corrosion resistance.

D. Fan blades shall be statically and dynamically balanced.

E. Condenser-fan openings shall be equipped with PVC-coated steel wire safety guards.

2.04. Compressors:

A. Compressors shall be rotary scroll.

B. Operating oil charge and a crankcase heater control oil dilution.

C. Compressors shall be mounted on two rails having rubber in shear vibration isolators.

D. Staging of compressors shall provide unloading capability.

E. Compressor motors shall be cooled by refrigerant gas passing through motor windings and shall have either internal line break thermal and current overload protection or external current overload modules with compressor temperature sensors.

2.05. Condenser Coils:

A. Coil shall be air-cooled microchannel heat exchanger (MCHX) and shall have a series of flat tubes containing a series of multiple, parallel flow microchannels layered between the refrigerant manifolds. Microchannel coils shall consist of a two-pass arrangement. Coil construction shall consist of aluminum alloys for the fins, tubes and manifolds in combination with a corrosion-resistant coating on the tubes.

B. Tubes shall be cleaned, dehydrated, and sealed.

C. Assembled condenser coils shall be leak tested and pressure tested at 650 psig (4482 kPa).

2.06. Refrigeration Components:

A. Refrigeration circuit components shall include liquid line temperature relief device, pressure transducers, liquid line shutoff valve, suction shutoff valve, suction line accumulators, nitrogen holding charge, and compressor oil.

B Standard line length (0-100 ft)

C. Long line length check valves are required for liquid line installation on all linear line length applications of more than 100 ft (30.5 m) to prevent liquid migration during unit shutdown. For any 025-030 size dual circuit unit application where evaporator is located higher than the condensing unit, check valves are required for linear line length above 55 ft (16.8 m).

D. Units shall include one factory-installed suction line accumulator for each refrigerant circuit.

2.07. Controls and Safeties:

A. Unit ComfortLink controls shall include:

1. Scrolling marquee display module shall be used for accessing condensing unit information, reading sensor values, and testing the condensing unit. The scrolling marquee display is a 4-key, 4-character, 16-segment LED (light-emitting diode) display. Eleven mode LEDs shall be located on the display as well as an Alarm Status LED. The display shows all of the ComfortLink control codes (with 60-character expandable clear language), plus set points, time of day, temperatures, pressures, and superheat. Additional information can be displayed all at once with the accessory Navigator™ display.
2. Carrier Comfort Network® (CCN) system capability.
3. Unit control with standard pressure transducer, discharge pressure transducer and suction temperature thermistors.
4. Current alarm list and alarm history list on display.
5. Automatic compressor lead/lag control.
6. Service run test capability.
7. Compressor minimum run time (3 minutes) and minimum off time (3 minutes).
8. Service diagnostic mode.
9. Self-contained low voltage control circuit.
10. Cycle condenser fans to maintain proper head pressure control.
11. Capacity control with staging compressors.

12. Alarm relay output to indicate when unit is in alarm condition.

B. Minimum unit safety devices shall include:

1. Solid-state compressor lockout to provide optional reset capability at the space thermostat if any of the following safety devices trip and shut off compressor.
   a. Compressor lockout protection for internal or external overload.
   b. Low pressure protection.
   c. High pressure protection (high pressure switch or internal).
   d. Compressor reverse rotation protection.
   e. Loss of charge protection.
   f. Low suction superheat protection.
   g. Short cycle protection.
   h. Suction and discharge pressure transducers.
   i. Circuit breakers or fuses for short circuit protection of compressors.

2.08 Operating Characteristics:

A. The capacity of the condensing unit shall meet or exceed ____ Btuh (____ kW) at a suction temperature of ____ F (____ C). The power consumption at full load shall not exceed ____ Btuh (____ kW).

B. The combination of the condensing unit and the evaporator or air handling unit shall have a total net cooling capacity of ____ Btuh (____ kW) or greater at conditions of ____ cfm (____ L/s) entering-air temperature at the evaporator at ____ F (____ C) wet bulb and ____ F (____ C) dry bulb, and air entering the condensing unit at ____ F (____ C).

C. The system shall have an Energy Efficiency Ratio (EER) of ____ Btuh/watt or greater at standard AHRI conditions.

2.09 Electrical Requirements:

A. All unit power wiring shall enter unit cabinet at a single location. Unit shall be provided with a XL starter and a terminal block.

2.10 Special Features:

A. Optional E-coated copper-fin coils:

1. Coil shall have a flexible epoxy polymer coating uniformly applied to all coil surface areas without material bridging between fins. Coating process shall ensure complete coil encapsulation. Color shall be high gloss black with gloss; 60° of 65 to 90% per ASTM D523-89. Uniform dry film thickness from 0.8 to 1.2 mil on all surface areas including fin edges. Superior hardness characteristics of 2H per ASTM D3363-92A and cross hatch adhesion of 4B-5B per ASTM D3359-93. Impact resistance shall be up to 160 in./lb (ASTM D2794-93). Humidity and water immersion resistance shall be up to minimum 1000 and 250 hours respectively (ASTM D2247-92 and ASTM D870-92). Corrosion durability shall be confirmed through testing to no less than 3000 hours salt spray per ASTM B117-90. Coil construction shall be copper-fins mechanically bonded to copper tube sheets. Galvanized steel tube sheets shall not be acceptable. A polymer strip shall prevent coil assembly from contacting sheet metal coil pan to maintain coating integrity and minimize corrosion potential between the coil and pan.

B. Navigator™ Hand Held Display:

1. Portable hand held display module with a minimum of 4 lines and 20 characters per line, of clear English, French, Spanish, or Portuguese language.
2. Display menus shall provide clear language descriptions of all menu items, operating modes, configuration points and alarm diagnostics. Reference to factory codes shall not be accepted.
3. RJ-14 connection plug shall allow display module to be connected to factory-installed receptacle.
4. Industrial grade coiled extension cord shall allow the display module to be moved around the unit.
5. Magnets shall hold the display module to any sheet metal panel to allow hands-free operation.
6. Display module shall have NEMA (National Electrical Manufacturers Association, U.S.A.) 4x housing suitable for use in outdoor environments.
7. Display shall have back light and contrast adjustment for easy viewing in bright sunlight or night conditions.
8. Navigator module shall have raised surface buttons with positive tactile response.
9. Navigator module shall be available as field-installed accessory for all units.

C. BACnet Communication Option:
   1. The BACnet Communication option shall provide factory-installed communication capability with a BACnet MS/TP network. Allows integration with i-Vu® Open control system or a BACnet building automation system.

D. Energy Management Module (EMM):
   1. The EMM shall provide remote set point, demand limit control, and percent capacity input. The EMM is not needed with use of BACnet or LON accessory kit.

38AP GEMINISELECT AIR COOLED CONDENSING UNITS

These condensing units feature two independent refrigerant circuits, each circuit having its own highly efficient scroll compressors. All units are factory wired, nitrogen charged, and easily connected by refrigerant lines and control wiring to the matching Carrier air-handling unit (40RU or 39 Series). Various combinations of these extremely flexible condensing units matched with air handlers provide customized packages to cover a wide range of cooling requirements. Low roof-load weight distribution and weatherproof construction make these units excellent selections for rooftop or on-the-ground installations. These 38AP condensing units are well suited for commercial or industrial air conditioning applications.

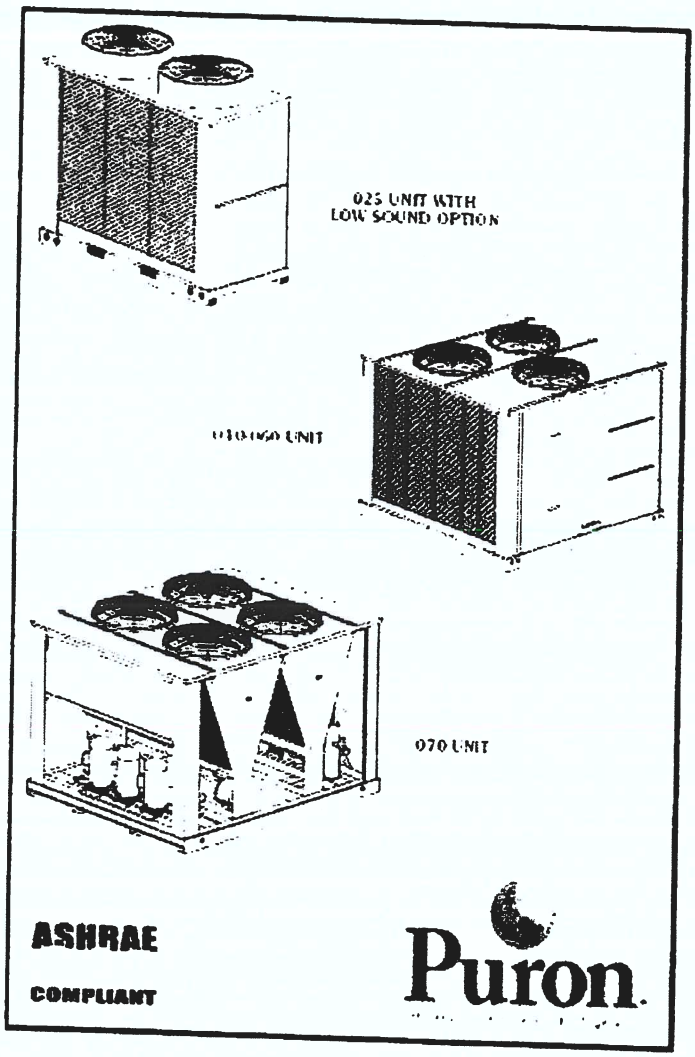

Gemini Select

These dependable split systems match Carrier's 40RU or 39 Series indoor-air handlers with the versatile outdoor 38AP condensing units for a wide selection of commercial cooling solutions.

- Split condensing units compatible with ASHRAE 90.1
- Chlorine-free, non-ozone depleting Puron refrigerant (R-410A)
- Condenser coils feature the Novation® heat exchanger with microchannel coil technology
- 38APS single-circuit unit has up to 3 rotary scroll compressors
- 38APD unit has up to 6 rotary scroll compressors with 2 independent circuits
- Standard scroll compressor units operate as low as 33% (single circuit) or 15% (dual circuit) of nominal capacity
- Optional digital scroll compressors allow incremental unloading down to 10% (single circuit) or 5% (dual circuit) of nominal capacity for VAV applications
- Protection against high discharge and low suction refrigerant pressure, and low oil pressure

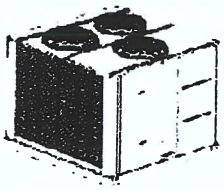

Outdoor Unit Parameters

Unit Quantity	1	
Unit Model	38APD	
Unit Size	40 Tons	
Voltage	208-3-60	V-Ph-Hz
No of Circuits	Two Circuits	

System Parameter

System Quantity	1	
Refrigerant Type	PURON	
Compressor Quantity	2 (Circ A), 2 (Circ B)	
Compressor Type	Scroll	
Std. Capacity Steps	23, 50, 73, 100	
Std. Min Outdoor Temp(Cooling)	32.0	°F
No of Outdoor fans	3	

Outdoor Unit Dimensions and Weight

Unit Length	7' 8.1"	
Unit Width	7' 4.2"	
Unit Height	6' 1.0"	
Unit Operating Weight	2094	lb

Warranty Information Outdoor (Note: for US & Canada only)

First Year - Parts Only (Standard)

NOTE: Please see Warranty Catalog 808-218 for explanation of policies and ordering methods.

Ordering Information

Part Number	Description	Quantity
Base Unit - Outdoor		
38APD04056-3009J		
	Base Unit	1
	Standard Line Length, RTPF	
	Single Point Power, Terminal Block	1
	Export packaging, (Skid + Bag)	1
	Scrolling Marquee, EMM, BACnet Communication	1
	Copper E-Coat Fin / Copper Tube	1
Accessories		1
30GT-911---062	Navigator for Outdoor Unit	
33CS2PP2S-03	Thermostat for Outdoor Unit	1
		1

System:

No. of Stages:	38APD040	
System Quantity:	Dual Stage	
Altitude	1	
EER @ ARI Conditions:	600.0	ft
EER @ Ambient Conditions:	11.5	
IPLV	10.7	
Capacity Split Percentage (A ckt/B ckt)	15.3	
Suction Line Loss	54/46	%
Condensing unit is rated in accordance with ARI 365	2.0	°F

Typical Liquid and Suction Line Sizing

Pipe Length	Liquid Line Size	Suction Line Size
0 - 25	5/8 (A), 5/8 (B)	1 1/8 (A), 1 1/8 (B)
26 - 50	5/8 (A), 5/8 (B)	1 3/8 (A), 1 3/8 (B)
51 - 75	5/8 (A), 5/8 (B)	1 5/8 (A), 1 5/8 (B)
76 - 100	7/8 (A), 5/8 (B)	1 5/8 (A), 1 5/8 (B)
101 - 125	7/8 (A), 7/8 (B)	1 5/8 (A), 1 5/8 (B)
126 - 150	7/8 (A), 7/8 (B)	2 1/8 (A), 1 5/8 (B)
151 - 175	7/8 (A), 7/8 (B)	2 1/8 (A), 1 5/8 (B)
176 - 200	7/8 (A), 7/8 (B)	2 1/8 (A), 2 1/8 (B)

Do NOT exceed 200 ft max linear separation or 75 ft vertical liquid lift. Oil management is critical on split systems for compressor reliability. Refrigerant circuit warranty may be void beyond these limits.

Liquid Line Sizing

Pipe Length	Liquid Line Size
0 - 25	5/8 (A), 5/8 (B)
26 - 50	5/8 (A), 5/8 (B)
51 - 75	5/8 (A), 5/8 (B)
76 - 100	7/8 (A), 5/8 (B)
101 - 125	7/8 (A), 7/8 (B)
126 - 150	7/8 (A), 7/8 (B)
151 - 175	7/8 (A), 7/8 (B)
176 - 200	7/8 (A), 7/8 (B)

Suction Line Sizing

Pipe Length	Suction Line Size
0 - 25	1 1/8 (A), 1 1/8 (B)
26 - 50	1 3/8 (A), 1 3/8 (B)
51 - 75	1 5/8 (A), 1 5/8 (B)
76 - 100	1 5/8 (A), 1 5/8 (B)
101 - 125	1 5/8 (A), 1 5/8 (B)
126 - 150	2 1/8 (A), 1 5/8 (B)
151 - 175	2 1/8 (A), 1 5/8 (B)
176 - 200	2 1/8 (A), 2 1/8 (B)

Dual suction riser may be required, refer to PD.

Outdoor Unit Parameters

Unit Quantity:	1	
PartNumber:	38APD04056-3009J	
Unit Model	38APD	
Unit Size:	40 Tons	
Voltage	208-3-60	V-Ph-Hz
Total Clg Cap.(Gross):	457.4	MBH

SDT:		
SDT2:	124.3	°F
SCT:	120.9	°F
SCT2:	124.2	°F
Clg Ent Air DB	120.8	°F
Saturated Suction Temp	95.0	°F
	45.0	°F

38AP units are not designed for Refrigeration Duty. Unit operational range should be reviewed to ensure that operation at full and part load conditions with Saturated Suction Temperatures at or below 30 F are avoided. Operation below 30 F SST may result in ice build-up on evaporator coil resulting in liquid flood-back and possible compressor failure. Return/Mixed Air Temperature should not be below 55F. If the customer requires differently, please contact application engineering

Outdoor Electrical Data

Unit Voltage:	208-3-60	V-Ph-Hz
Unit MCA:	167.2	Amps
Unit MOCP	200.0	Amps
Compressor Power	38.30	kW
Voltage Range Min	187	V
Voltage Range Max.	254	V
Compressor RLA	35.8/33.4	
Compressor LRA.	239/225	
Compressor Quantity	2 (Circ A), 2 (Circ B)	
Fan Motors Qty:	3	
Fan Motor FLA	NA	Amps
Notice Outdoor unit elect. data is based on 208-3-60		

FIOPS and Accessories Information

FIOPS	Quantity
Standard Line Length RTPF	1
Export packaging (Skid + Bag)	1
Scrolling Marquee, EMM, BACnet Communication	1
Accessories	**Quantity**
Navigator for Outdoor Unit	1
Thermostat for Outdoor Unit	1

Liquid line check valve(s) prevent charge migration to compressor. These valves may be required for certain applications, refer to PD.

Acoustic Information

A-Wgt Outdoor Sound Power Level **96.5** dbA

Acoustic Notes:

1. The acoustic center of the unit is located at the geometric center of the unit.
2. All estimated sound power levels, dB re 1 Pico watt should not be guaranteed or certified as being the actual sound power levels

Advanced Acoustics Parameters

1. Unit height above ground: 1.0 ft
2. Horizontal distance from unit to receiver: 20.0 ft
3. Receiver height above ground: 5.7 ft
4. Height of obstruction: 0.0 ft
5. Horizontal dist. from obstruction to receiver: 0.0 ft
6. Horizontal dist. from unit to obstruction: 0.0 ft

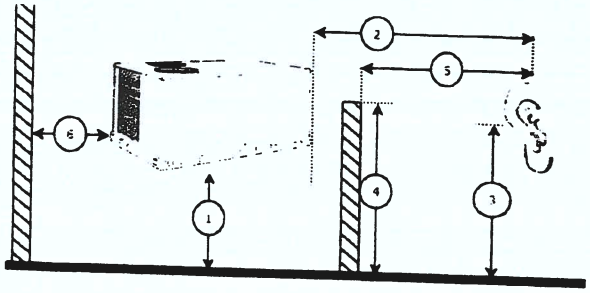

Detailed Acoustics Information

Octave Band Center Frequency, Hz	31	63	125	250	500	1k	2k	4k	8k	Ov
Sound Power Levels at Unit's Acoustic Center (Lw), dB	78	98	95	94	95	91	88	85	82	10:
A-Wgted Sound Power Levels at Unit's Acoustic Center (LwA), dBA	39	72	79	85	91	91	89	86	81	97
Sound Press. Levels at Dist. Specified above (Lp), dB	53	73	70	69	69	66	63	60	57	77
A-Wgted Sound Press. Levels at Dist. Specified above (LpA), dBA	14	47	54	60	66	66	64	61	56	72

Calculation methods used in this program are patterned after the ASHRAE Guide other ASHRAE Publications and the AHRI Acoustical Standards While a very significant effort has been made to insure the technical accuracy of this program, it is assumed that the user is knowledgeable in the art of system sound estimation and is aware of the tolerances involved in real world acoustical estimation This program makes certain assumptions as to the dominant sound sources and sound paths which may not always be appropriate to the real system being estimated Because of this, no assurances can be offered that this software will always generate an accurate sound prediction from user supplied input data. If in doubt about the estimation of expected sound levels in a space, an Acoustical Engineer or a person with sound prediction expertise should be consulted

Outdoor Unit Parameters:

Tag Name: **RFK BUILDING FIRST FLOOR 112221**
Unit Model: **38APD**
Unit Size: **40 Tons**
System Type: **Dx Cooling Only**
Refrigerant Type: **PURON**
Compressor Quantity: **2 (Circ A), 2 (Circ B)**
Compressor Type: **Scroll**

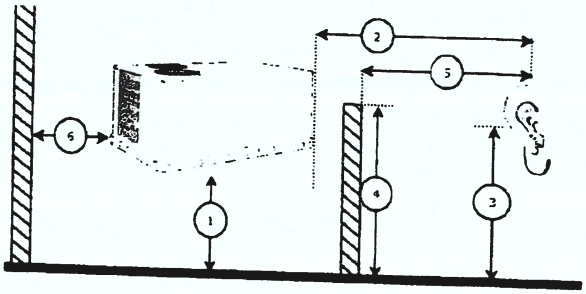

Advanced Accoustics Parameters

1. Unit height above ground: **1.0** ft
2. Horizontal distance from unit to receiver: **20.0** ft
3. Receiver height above ground: **5.7** ft
4. Height of obstruction: **0.0** ft
5. Horizontal distance from obstruction to receiver: **0.0** ft
6. Horizontal distance from unit to obstruction: **0.0** ft

Detailed Acoustics Information

Octave Band Center Frequency, Hz	31	63	125	250	500	1k	2k	4k	8k	Ov
Sound Power Levels at Unit's Acoustic Center (Lw), dB	78	98	95	94	95	91	88	85	82	102
A-Wgted Sound Power Levels at Unit's Acoustic Center (LwA), dBA	39	72	79	85	91	91	89	86	81	97
Sound Press. Levels at Dist. Specified above (Lp), dB	53	73	70	69	69	66	63	60	57	77
A-Wgted Sound Press. Levels at Dist. Specified above (LpA), dBA	14	47	54	60	66	66	64	61	56	72

Calculation methods used in this program are patterned after the ASHRAE Guide; other ASHRAE Publications and the AHRI Acoustical Standards While a very significant effort has been made to insure the technical accuracy of this program, it is assumed that the user is knowledgeable in the art of system sound estimation and is aware of the tolerances involved in real world acoustical estimation This program makes certain assumptions as to the dominant sound sources and sound paths which may not always be appropriate to the real system being estimated Because of this, no assurances can be offered that this software will always generate an accurate sound prediction from user supplied input data If in doubt about the estimation of expected sound levels in a space, an Acoustical Engineer or a person with sound prediction expertise should be consulted

Acoustic Note:

1. Estimated Sound Power levels - dB re: 1 picowatt
2. Estimated Sound Pressure levels - dB re: 20 micropascal
3. Estimated sound levels given above are assumed to originate at the acoustic center of the unit The acoustic center of the unit is located at the projection of the condensing unit's geometric center of its base

4. Sound power levels shown above were determined in accordance with ARI standard 370 for large outdoor refrigeration and air conditioning equipment

5. Calculation methods used in this program are patterned after the ASHRAE Guide; other ASHRAE Publications and the ARI Acoustical Standards While a very significant effort has been made to insure the technical accuracy of this program, it is assumed that the user is knowledgeable in the art of system sound estimation and is aware of the tolerances involved in real world acoustical estimation This program makes certain assumptions as to the dominant sound sources and sound paths which may not always be appropriate to the real system being estimated Because of this, no assurances can be offered that this software will always generate an accurate sound prediction from user supplied input data If in doubt about the estimation of expected sound levels in a space, an Acoustical Engineer or a person with sound prediction expertise should be consulted

Certified Drawing for RFK BUILDING FIRST FLOOR 112221

Project: HA-1702-21-11 UOG IFB B21-17 PURCHASING HVAC EQUIP
Prepared By: BERNARD LLARENAS

12/01/2C
02:16I

NOTES:
1. BE SURE TO USE A WET RAG AND REMOVE ALL VALVE CORES BEFORE BRAZING FIELD PIPING
2. DO NOT CAP OR OTHERWISE OBSTRUCT THE LIQUID LINE TEMPERATURE RELIEF
3. Ø7/8 (22.4) PILOT HOLE PROVIDED FOR LOCATING FIELD POWER WIRING ACTUAL HOLE REQUIRED DEPENDS ON FIELD WIRE SIZING
4. Ø0.437 (11.10) HOLE USED FOR MOUNTING UNIT
5. UNIT MUST HAVE CLEARANCES AS FOLLOWS
   TOP - DO NOT RESTRICT.
   COIL END - 42 (1067) FROM SOLID SURFACE
   PANEL SIDE - 48 (1219) PER NEC.
6. SEE TABLE COLUMN H; DIMENSION FOR STANDARD AND LOW SOUND WITH STACK FAN OPTION
7. CARRIER DOES NOT RECOMMEND INSTALLATION IN A PIT
8. UNIT CAN BE HANDLED USING THE FORK TRUCK LIFT POCKETS.
9. DIMENSIONS SHOWN IN INCHES(MM).
10. SIZES 040 AND 050 UNITS HAVE 3 CONDENSER FANS.SIZE 060 UNITS HAVE 4 CONDENDER FANS
11. WEIGHT DOES NOT INCLUDE REFRIGERANT CHANGE
12. FOR 38APS PIPING,REFER TO 'CIRCUIT A LIQUID CONNECTION' AND 'CIRCUIT A SUCTION CONNECTION' DIMENSIONS SHOWN

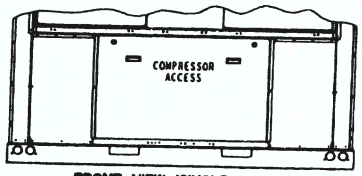

FRONT VIEW (SINGLE CIRCUIT)

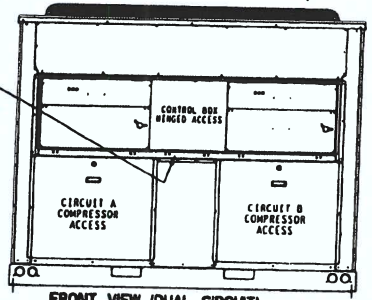

FRONT VIEW (DUAL CIRCUIT)

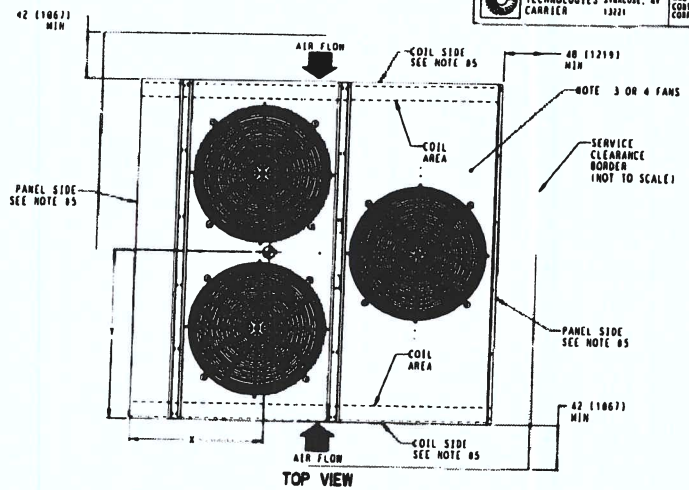

TOP VIEW

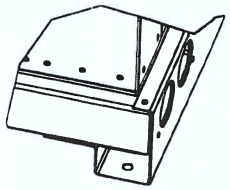

DETAIL A

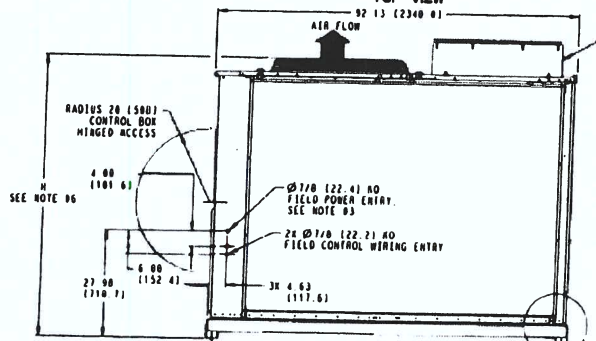

RIGHT SIDE VIEW

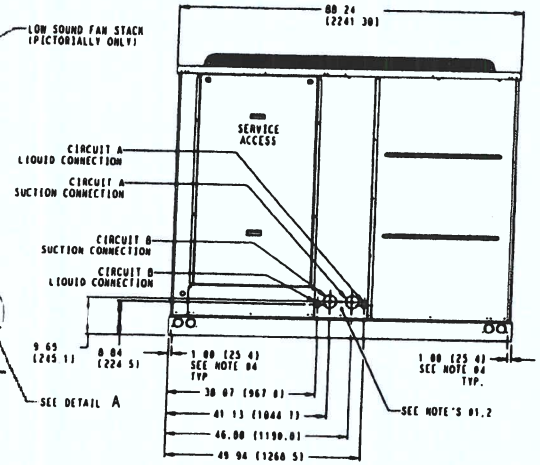

REAR VIEW

	UNIT	STD. UNIT WT. LBS.	STD. UNIT WT. KG.	CENTER OF GRAVITY X	CENTER OF GRAVITY Y	UNIT HEIGHT H	SERVICE VALVE CONNECTIONS SUCTION	SERVICE VALVE CONNECTIONS LIQUID
STANDARD	38APS040	1968	893	35 8 (889)	44.0 (1118)	73.0 (1854)	2-1/8 (54)	7/8 (22)
	38APD040	2094	950	33 7 (856)	44.1 (1120)		1-5/8 (41)	5/8 (16)
	38APS050	1977	897	34.9 (886)	44 8 (1118)		2-1/8 (54)	7/8 (22)
	38APD050	2120	961	33 4 (848)	44 1 (1120)		1-5/8 (41)	5/8 (16)
	38APD060	2227	1010	34 4 (874)	44 1 (1120)		1-5/8 (41)	5/8 (16)
LOW SOUND	38APS040	2022	917	35 8 (889)	44.0 (1118)	78 5 (1994)	2 1/8 (54)	7/8 (22)
	38APD040	2140	974	33 7 (856)	44.1 (1120)		1-5/8 (41)	5/8 (16)
	38APS050	2031	921	34 9 (886)	44.0 (1118)		2-1/8 (54)	7/8 (22)
	38APD050	2174	986	33 4 (848)	44 1 (1120)		1-5/8 (41)	5/8 (16)
	38APD060	2299	1043	34 4 (874)	44 1 (1120)		1-5/8 (41)	5/8 (16)

DATE	SUPERCEDES			REV
04/09/12	F	38AP040-060 UNIT ASSY	38AP555556	G

Commercial Split Systems Builder 1.39z

OPA-PA-22-002-208

GUIDE SPECIFICATIONS – 38APD04056-3009J

HVAC Guide Specifications
Commercial Air-Cooled Condensing Units with Puron® Refrigerant (R-410A)

Size: 040

Part 1: General

SYSTEM DESCRIPTION

1.01. Outdoor-mounted, air-cooled condensing unit with Puron® refrigerant (R-410A) suitable for on-the-ground or rooftop installation. The 38APD unit shall have two independent refrigeration circuits and shall consist of two, four, five or six rotary scroll compressors. Unit shall have air-cooled coils, propeller-type condenser fans, a control box, and shall discharge condenser air vertically upward as shown on certified drawings. Unit shall be used in refrigeration circuit with a central station air-handling unit or direct-expansion coils.

QUALITY ASSURANCE

1.01. Unit performance shall be rated in accordance with AHRI (Air-Conditioning, Heating, and Refrigeration Institute) Standard 365, latest edition (U.S.A).

1.02. Unit construction shall comply with latest edition of ASHRAE (American Society of Heating, Refrigerating, and Air-Conditioning Engineers) 15 Safety Code, UL 1995, and ASME (American Society of Mechanical Engineers) applicable codes (U.S.A. codes).

1.03. The management system governing the manufacturer of the product is ISO (International Organization for Standardization) 9001: 2015 certified.

1.04. Base unit shall be constructed in accordance with UL (Underwriters Laboratories) standards and CSA (Canadian Standards Association)..

1.05. Painted parts shall withstand 1000 hours in constant neutral salt spray under ASTM B117 conditions with a 1mm scribe per ASTM D1654. After test, painted parts shall show no signs of wrinkling or cracking, no loss of adhesion, no evidence of blistering, and the mean creepage shall not exceed 1/4 in. (Rating = 4 per ASTM D1654) on either side of the scribe line.

1.06. Design pressure shall be 650 psig (4482 kPa).

1.07. Unit shall be functional checked at the factory.

1.08. Lifting holes shall be provided to facilitate rigging.

DELIVERY, STORAGE, AND HANDLING

1.01. Unit shall be shipped as single package and shall be stored and handled per unit manufacturer's recommendations.

WARRANTY (FOR INCLUSION BY SPECIFYING ENGINEER)

Part 2: Products

EQUIPMENT

2.01. General:

A. Factory assembled, single-piece, air-cooled condensing unit. Contained within the unit enclosure shall be all factory wiring, piping, controls, compressors, nitrogen holding charge, and special features required prior to field start-up.

2.02. Unit Cabinet:

A. Cabinet shall be galvanized steel casing with a baked enamel powder or pre-painted finish.

B. Control box access panels shall be hinged for service access.

2.03. Fans:

A. Condenser fans shall be direct-drive propeller type, discharging air vertically upward.

B. All condenser fan motors shall be totally enclosed 3-phase type with permanently lubricated ball bearings, class F insulation and internal, automatic-reset thermal overload protection or manual reset calibrated circuit breakers.

C. Shafts shall have inherent corrosion resistance.

D. Fan blades shall be statically and dynamically balanced.

E. Condenser-fan openings shall be equipped with PVC-coated steel wire safety guards.

2.04. Compressors:

A. Compressors shall be rotary scroll.

B. Operating oil charge and a crankcase heater control oil dilution.

C. Compressors shall be mounted on two rails having rubber in shear vibration isolators.

D. Staging of compressors shall provide unloading capability.

E. Compressor motors shall be cooled by refrigerant gas passing through motor windings and shall have either internal line break thermal and current overload protection or external current overload modules with compressor temperature sensors.

2.05. Condenser Coils:

A. Coil shall be air-cooled microchannel heat exchanger (MCHX) and shall have a series of flat tubes containing a series of multiple, parallel flow microchannels layered between the refrigerant manifolds. Microchannel coils shall consist of a two-pass arrangement. Coil construction shall consist of aluminum alloys for the fins, tubes and manifolds in combination with a corrosion-resistant coating on the tubes.

B. Tubes shall be cleaned, dehydrated, and sealed.

C. Assembled condenser coils shall be leak tested and pressure tested at 650 psig (4482 kPa).

2.06. Refrigeration Components:

A. Refrigeration circuit components shall include liquid line temperature relief device, pressure transducers, liquid line shutoff valve, suction shutoff valve, suction line accumulators, nitrogen holding charge, and compressor oil.

B. Standard line length (0-100 ft)

C. Long line length check valves are required for liquid line installation on all linear line length applications of more than 100 ft (30.5 m) to prevent liquid migration during unit shutdown. For any 025-030 size dual circuit unit application where evaporator is located higher than the condensing unit, check valves are required for linear line length above 55 ft (16.8 m).

D. Units shall include one factory-installed suction line accumulator for each refrigerant circuit.

2.07. Controls and Safeties:

A. Unit ComfortLink controls shall include:

1. Scrolling marquee display module shall be used for accessing condensing unit information, reading sensor values, and testing the condensing unit. The scrolling marquee display is a 4-key, 4-character, 16-segment LED (light-emitting diode) display. Eleven mode LEDs shall be located on the display as well as an Alarm Status LED. The display shows all of the ComfortLink control codes (with 60-character expandable clear language), plus set points, time of day, temperatures, pressures, and superheat. Additional information can be displayed all at once with the accessory Navigator™ display.
2. Carrier Comfort Network® (CCN) system capability.
3. Unit control with standard pressure transducer, discharge pressure transducer and suction temperature thermistors.
4. Current alarm list and alarm history list on display.
5. Automatic compressor lead/lag control.
6. Service run test capability.
7. Compressor minimum run time (3 minutes) and minimum off time (3 minutes).
8. Service diagnostic mode.
9. Self-contained low voltage control circuit.
10. Cycle condenser fans to maintain proper head pressure control.
11. Capacity control with staging compressors.

12. Alarm relay output to indicate when unit is in alarm condition.

B. Minimum unit safety devices shall include:

1. Solid-state compressor lockout to provide optional reset capability at the space thermostat if any of the following safety devices trip and shut off compressor.
   a. Compressor lockout protection for internal or external overload.
   b. Low pressure protection.
   c. High pressure protection (high pressure switch or internal).
   d. Compressor reverse rotation protection.
   e. Loss of charge protection.
   f. Low suction superheat protection.
   g. Short cycle protection.
   h. Suction and discharge pressure transducers.
   i. Circuit breakers or fuses for short circuit protection of compressors.

2.08. Operating Characteristics:

A. The capacity of the condensing unit shall meet or exceed ____ Btuh (____ kW) at a suction temperature of ____ F (____ C). The power consumption at full load shall not exceed ____ Btuh (____ kW).

B. The combination of the condensing unit and the evaporator or air handling unit shall have a total net cooling capacity of ____ Btuh (____ kW) or greater at conditions of ____ cfm (____ L/s) entering-air temperature at the evaporator at ____ F (____ C) wet bulb and ____ F (____ C) dry bulb, and air entering the condensing unit at ____ F (____ C).

C. The system shall have an Energy Efficiency Ratio (EER) of ____ Btuh/watt or greater at standard AHRI conditions.

2.09 Electrical Requirements:

A. All unit power wiring shall enter unit cabinet at a single location. Unit shall be provided with a XL starter and a terminal block.

2.10. Special Features:

A. Optional E-coated copper-fin coils.

1. Coil shall have a flexible epoxy polymer coating uniformly applied to all coil surface areas without material bridging between fins. Coating process shall ensure complete coil encapsulation. Color shall be high gloss black with gloss; 60° of 65 to 90% per ASTM D523-89. Uniform dry film thickness from 0.8 to 1.2 mil on all surface areas including fin edges. Superior hardness characteristics of 2H per ASTM D3363-92A and cross hatch adhesion of 4B-5B per ASTM D3359-93. Impact resistance shall be up to 160 in./lb (ASTM D2794-93). Humidity and water immersion resistance shall be up to minimum 1000 and 250 hours respectively (ASTM D2247-92 and ASTM D870-92). Corrosion durability shall be confirmed through testing to no less than 3000 hours salt spray per ASTM B117-90. Coil construction shall be copper-fins mechanically bonded to copper tube sheets. Galvanized steel tube sheets shall not be acceptable. A polymer strip shall prevent coil assembly from contacting sheet metal coil pan to maintain coating integrity and minimize corrosion potential between the coil and pan.

B. Navigator™ Hand Held Display:

1. Portable hand held display module with a minimum of 4 lines and 20 characters per line, of clear English, French, Spanish, or Portuguese language.
2. Display menus shall provide clear language descriptions of all menu items, operating modes, configuration points and alarm diagnostics. Reference to factory codes shall not be accepted.
3. RJ-14 connection plug shall allow display module to be connected to factory-installed receptacle.
4. Industrial grade coiled extension cord shall allow the display module to be moved around the unit.
5. Magnets shall hold the display module to any sheet metal panel to allow hands-free operation.
6. Display module shall have NEMA (National Electrical Manufacturers Association, U.S.A.) 4x housing suitable for use in outdoor environments.
7. Display shall have back light and contrast adjustment for easy viewing in bright sunlight or night conditions.
8. Navigator module shall have raised surface buttons with positive tactile response.
9. Navigator module shall be available as field-installed accessory for all units.

C BACnet Communication Option:

1. The BACnet Communication option shall provide factory-installed communication capability with a BACnet MS/TP network. Allows integration with i-Vu® Open control system or a BACnet building automation system.

D. Energy Management Module (EMM):

1. The EMM shall provide remote set point, demand limit control, and percent capacity input. The EMM is not needed with use of BACnet or LON accessory kit.

38AP GEMINISELECT AIR COOLED CONDENSING UNITS

These condensing units feature two independent refrigerant circuits, each circuit having its own highly efficient scroll compressors. All units are factory wired, nitrogen charged, and easily connected by refrigerant lines and control wiring to the matching Carrier air-handling unit (40RU or 39 Series). Various combinations of these extremely flexible condensing units matched with air handlers provide customized packages to cover a wide range of cooling requirements. Low roof-load weight distribution and weatherproof construction make these units excellent selections for rooftop or on-the-ground installations. These 38AP condensing units are well suited for commercial or industrial air conditioning applications.

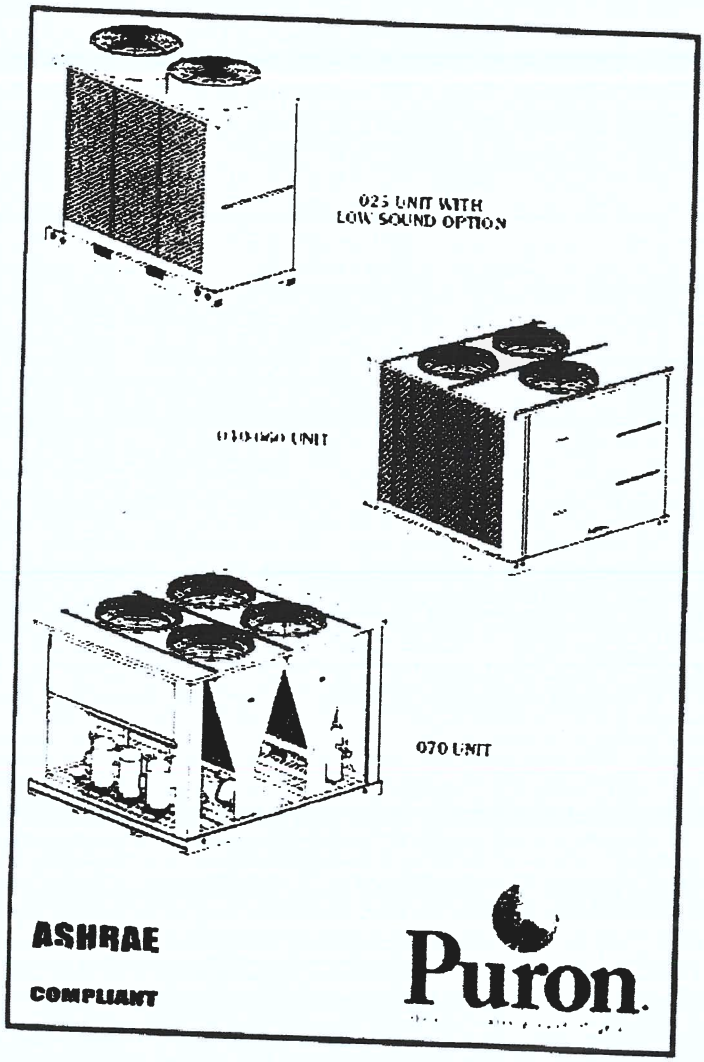

Gemini Select

These dependable split systems match Carrier's 40RU or 39 Series indoor-air handlers with the versatile outdoor 38AP condensing units for a wide selection of commercial cooling solutions.

- Split condensing units compatible with ASHRAE 90.1
- Chlorine-free, non-ozone depleting Puron refrigerant (R-410A)
- Condenser coils feature the Novation® heat exchanger with microchannel coil technology
- 38APS single-circuit unit has up to 3 rotary scroll compressors
- 38APD unit has up to 6 rotary scroll compressors with 2 independent circuits
- Standard scroll compressor units operate as low as 33% (single circuit) or 15% (dual circuit) of nominal capacity
- Optional digital scroll compressors allow incremental unloading down to 10% (single circuit) or 5% (dual circuit) of nominal capacity for VAV applications
- Protection against high discharge and low suction refrigerant pressure, and low oil pressure

20RFK BUILDING FIRST FLOOR MAIN ENTRANCE 112321

Submittal Cover Sheet
Unit Report
Performance Summary Report
Acoustic Summary
Certified Drawings
Guide Specifications
Feature Sheet

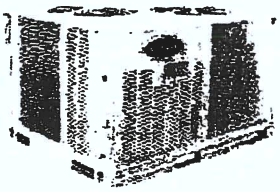

Outdoor Unit Parameters

Unit Quantity	1	
Unit Model	38AUD	
Unit Size	15 Tons	
Voltage	208-3-60	V-Ph-Hz
Condenser Coil	Cu/Cu	
No of Stages	Dual Stage	

System Parameter

System Quantity	1	
Refrigerant Type	PURON	
Compressor Quantity	2	
Compressor Type	Scroll	
Std Capacity Steps	50, 100	
Std Min. Outdoor Temp(Cooling)	35.0	°F
No of Outdoor fans	3	

Outdoor Unit Dimensions and Weight

Unit Length	7' 2.4"	
Unit Width	3' 7.4"	
Unit Height	4' 2.4"	
Unit Shipping Weight	731	lb
Unit Operating Weight	731	lb

Warranty Information Outdoor (Note: for US & Canada only)
First Year - Parts Only (Standard)

NOTE: Please see Warranty Catalog 808-218 for explanation of policies and ordering methods.

Ordering Information

Part Number	Description	Quantity
Base Unit - Outdoor		
38AUDA16A0E5-0A0A0		
	Base Unit	1
	Cu/Cu Condensing Coil	
	Standard Refrigerant Options	1
	Service Options - None	1
	Electrical Options - None	1
	Packaging Options - Standard	1
	Standard Electrical Mechanical Controls	1
	Refrig Circ/Compressor Staging - Two Circuits/ Dual Stage	1
Accessories		
EF680035	Liquid Line Solenoid Valve for Outdoor Unit	2
EF680037	Liquid Line Solenoid Valve for Outdoor Unit	2

KM680004	Sight Glass for Outdoor Unit	2
33CS2PP2S-03	Thermostat for Outdoor Unit	1

The 38AUZ/AUD are furnished with filter drier which is factory provided (field installed). Additional filter driers can be purchased separately through RCD (Replacement Components Division). See the Product Library for Replacement Filter Drier Information for more information.

System:

No. of Stages	38AUD016	
System Quantity:	Dual Stage	
Altitude	1	
EER @ ARI Conditions	600.0	ft
Suction Line Loss	13.4	
	1.4	°F

Typical Liquid and Suction Line Sizing

Pipe Length	Liquid Line Size	Suction Line Size
0 - 25	3/8	7/8
26 - 50	3/8	1 1/8
51 - 75	1/2	1 1/8
76 - 100	1/2	1 1/8
101 - 125	1/2	1 3/8
126 - 150	5/8	1 3/8
151 - 175	5/8	1 3/8
176 - 200	5/8	1 3/8

Refer to the 38AU installation instructions for installation specific line sizing guidance

Outdoor Unit Parameters

Unit Quantity:	1	
PartNumber	38AUDA16A0E5-0A0A0	
Unit Model	38AUD	
Unit Size	15 Tons	
Condenser Coil	Cu/Cu	
Voltage	208-3-60	V-Ph-Hz
Total Clg Cap (Gross)	183.9	MBH
SDT:	116.5	°F
Clg Ent Air DB	95.0	°F
Saturated Suction Temp	45.0	°F

Outdoor Electrical Data

Unit Voltage	208-3-60	V-Ph-Hz
Unit MCA	60.8	Amps
Unit MOCP	80.0	Amps
Total Compressor Power of Unit	13.00	kW
Voltage Range Min	187	V
Voltage Range Max	253	V
Compressor RLA:	25	
Compressor LRA:	164	
Compressor Quantity	2	
Fan Motors Qty:	3	
Fan Motor FLA	1.5	Amps

Notice. Outdoor unit elect data is based on 208-3-60
Control Panel SCCR: 5kA RMS at Rated Symmetrical Voltage

Acoustics

Sound Power Levels, db re 10E-12 Watts

FIOPS and Accessories Information

FIOPS	Quantity
Accessories	**Quantity**
Liquid Line Solenoid Valve for Outdoor Unit	2
Liquid Line Solenoid Valve for Outdoor Unit	2
Sight Glass for Outdoor Unit	2

Thermostat for Outdoor Unit	1

A-Weighted	Outdoor Unit (dB)	Indoor Unit (dB,Ducted)
Total Level	82.6	NA
63Hz	60.5	NA
125Hz	65.1	NA
250Hz	70.3	NA
500Hz	77.2	NA
1000Hz	78.0	NA
2000Hz	75.4	NA
4000Hz	71.2	NA
8000Hz	63.9	NA
Sound Message	Sound for AUD016	

Acoustic Notes:

1 38AUZ/D/Q units sound ratings are in accordance with AHRI 270-2008 - Sound Rating of Outdoor Unitary Equipment.
2 The acoustic center of the unit is located at the geometric center of the unit

Advanced Acoustics Parameters

1. Unit height above ground ..... 1.0 ft
2. Horizontal distance from unit to receiver ..... 20.0 ft
3. Receiver height above ground: ..... 5.7 ft
4. Height of obstruction: ..... 0.0 ft
5. Horizontal dist. from obstruction to receiver ..... 0.0 ft
6. Horizontal dist. from unit to obstruction: ..... 0.0 ft

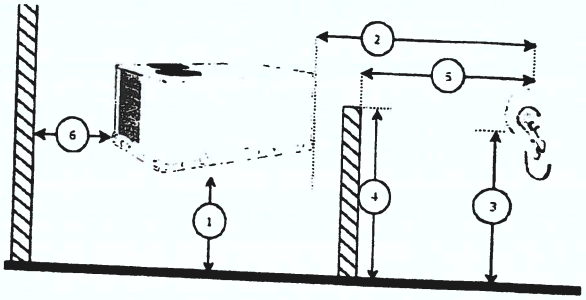

Detailed Acoustics Information

Octave Band Center Frequency, Hz	63	125	250	500	1k	2k	4k	8k	Overall
Sound Power Levels at Unit's Acoustic Center (Lw), dB	87	81	79	80	78	74	70	65	89
A-Wgted Sound Power Levels at Unit's Acoustic Center (LwA), dBA	61	65	70	77	78	75	71	64	83
Sound Press. Levels at Dist. Specified above (Lp), dB	62	57	55	56	54	50	46	41	65
A-Wgted Sound Press Levels at Dist Specified above (LpA), dBA	36	41	46	53	54	51	47	40	58

Calculation methods used in this program are patterned after the ASHRAE Guide, other ASHRAE Publications and the AHRI Acoustical Standards While a very significant effort has been made to insure the technical accuracy of this program, it is assumed that the user is knowledgeable in the art of system sound estimation and is aware of the tolerances involved in real world acoustical estimation This program makes certain assumptions as to the dominant sound sources and sound paths which may not always be appropriate to the real system being estimated. Because of this, no assurances can be offered that this software will always generate an accurate sound prediction from user supplied input data If in doubt about the estimation of expected sound levels in a space, an Acoustical Engineer or a person with sound prediction expertise should be consulted

Outdoor Unit Parameters:

Tag Name: **20RFK BUILDING FIRST FLOOR MAIN ENTRANCE 112321**
Unit Model: **38AUD**
Unit Size: **15 Tons**
System Type: **Dx Cooling Only**
Refrigerant Type: **PURON**
Compressor Quantity: **2**
Compressor Type: **Scroll**

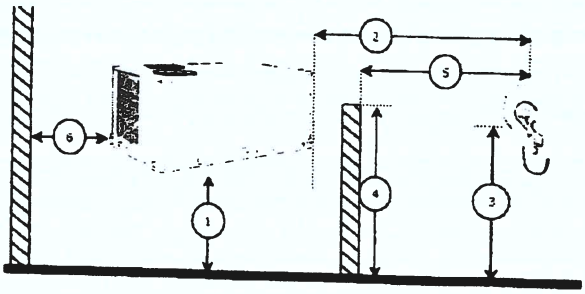

Advanced Accoustics Parameters

1. Unit height above ground: **1.0** ft
2. Horizontal distance from unit to receiver: **20.0** ft
3. Receiver height above ground: **5.7** ft
4. Height of obstruction: **0.0** ft
5. Horizontal distance from obstruction to receiver: **0.0** ft
6. Horizontal distance from unit to obstruction: **0.0** ft

Detailed Acoustics Information

Octave Band Center Frequency, Hz	63	125	250	500	1k	2k	4k	8k	Overall
Sound Power Levels at Unit's Acoustic Center (Lw), dB	87	81	79	80	78	74	70	65	89
A-Wgted Sound Power Levels at Unit's Acoustic Center (LwA), dBA	61	65	70	77	78	75	71	64	83
Sound Press. Levels at Dist. Specified above (Lp), dB	62	57	55	56	54	50	46	41	65
A-Wgted Sound Press. Levels at Dist. Specified above (LpA), dBA	36	41	46	53	54	51	47	40	58

Calculation methods used in this program are patterned after the ASHRAE Guide, other ASHRAE Publications and the AHRI Acoustical Standards. While a very significant effort has been made to insure the technical accuracy of this program, it is assumed that the user is knowledgeable in the art of system sound estimation and is aware of the tolerances involved in real world acoustical estimation. This program makes certain assumptions as to the dominant sound sources and sound paths which may not always be appropriate to the real system being estimated. Because of this, no assurances can be offered that this software will always generate an accurate sound prediction from user supplied input data. If in doubt about the estimation of expected sound levels in a space, an Acoustical Engineer or a person with sound prediction expertise should be consulted.

Acoustic Note:

1. 38AUZ/D/Q units sound ratings are in accordance with AHRI 270-2008 - Sound Rating of Outdoor Unitary Equipment.
2. The acoustic center of the unit is located at the geometric center of the unit
3. All estimated sound power levels, dB re 1 Picowatt should not be guaranteed or certified as being the actual sound power levels.

Acoustic Note:

1. Estimated Sound Power levels - dB re. 1 picowatt
2. Estimated Sound Pressure levels - dB re: 20 micropascal
3. Estimated sound levels given above are assumed to originate at the acoustic center of the unit. The acoustic center of the unit is located at the projection of the condensing unit's geometric center of its base.

4. Sound power levels shown above were determined in accordance with ARI standard 370 for large outdoor refrigeration and air conditioning equipment.

5. Calculation methods used in this program are patterned after the ASHRAE Guide; other ASHRAE Publications and the ARI Acoustical Standards. While a very significant effort has been made to insure the technical accuracy of this program, it is assumed that the user is knowledgeable in the art of system sound estimation and is aware of the tolerances involved in real world acoustical estimation. This program makes certain assumptions as to the dominant sound sources and sound paths which may not always be appropriate to the real system being estimated. Because of this, no assurances can be offered that this software will always generate

an accurate sound prediction from user supplied input data. If in doubt about the estimation of expected sound levels in a space, an Acoustical Engineer or a person with sound prediction expertise should be consulted.

Certified Drawing for 20RFK BUILDING FIRST FLOOR MAIN ENTRANCE 112321

Project: HA-1702-21-11 UOG IFB B21-17 PURCHASING HVAC EQUIP

Prepared By: BERNARD LLARENAS

12/01/20
02:16F

UNIT	ELECTRICAL CHARACTERISTICS	STD UNIT WT		CORNER A		CORNER B		CORNER C		CORNER D		CENTER OF GRAVITY			UNIT HEIGHT
		LBS	KG	LBS	KG	LBS	KG	LBS	KG	LBS	KG	X	Y	Z	H
38AUZ*6 [illegible]	208-230-3-60 460-3-60 575-3-60	[illegible]	266	220	100	[illegible]	61	[illegible]	[illegible]	144	65.3	[illegible] (16.2)	[illegible] (492.1)	[illegible] (5.9)	[illegible]
38AUZ*6 [illegible]	208-230-3-60 460-3-60 575-3-60	[illegible]	265	220	100	[illegible]	61	[illegible]	[illegible]	144	65.3	[illegible] (16.2)	[illegible] (492.1)	[illegible] (5.9)	[illegible]
38AUZ*6 [illegible]F*	208-230-3-60 460-3-60 575-3-60	[illegible]	[illegible]	[illegible]	[illegible]	[illegible]	[illegible]	[illegible]	[illegible]	191	86	19 (16.2)	[illegible] (492.1)	[illegible] (5.9)	[illegible]
38AUZ*6 [illegible]F*	208-230-3-60 460-3-60 575-3-60	[illegible]	[illegible]	[illegible]	[illegible]	[illegible]	[illegible]	[illegible]	[illegible]	186	84	19 (16.2)	[illegible] (492.1)	[illegible] (5.9)	[illegible]

UNITED TECHNOLOGIES CARRIER

THIS DOCUMENT IS THE PROPERTY OF UNITED TECHNOLOGIES CARRIER CORPORATION AND IS DELIVERED UPON THE EXPRESS CONDITION THAT THE CONTENTS WILL NOT BE DISCLOSED OR USED WITHOUT CARRIER CORPORATION'S WRITTEN CONSENT

SUBMISSION OF THESE DRAWINGS OR DOCUMENTS DOES NOT CONSTITUTE PART PERFORMANCE OR ACCEPTANCE OF CONTRACT

NOTES:

1. MINIMUM CLEARANCE (LOCAL CODE, OR JURISDICTION MAY PREVAIL)
   A. BOTTOM TO COMBUSTIBLE SURFACES: 0 INCHES.
   B. OUTDOOR COIL: FOR PROPER AIR FLOW: 36 INCHES. ONE SIDE: [illegible] INCHES; THE OTHER: THE SIDE LETTING THE GREATER CLEARANCE IS OPTIONAL.
   C. OVERHEAD: 60 INCHES: TO ASSURE PROPER OUTDOOR FAN OPERATION.
   D. BETWEEN UNITS: CONTROL BOX SIDE: 42 INCHES PER NEC.
   E. BETWEEN UNIT AND UNGROUNDED SURFACE: CONTROL BOX SIDE: 36 INCHES PER NEC.
   F. BETWEEN UNIT AND BLOCK OR CONCRETE WALLS AND OTHER GROUNDED SURFACE: CONTROL BOX SIDE: 42 INCHES PER NEC.
2. WITH EXCEPTION OF THE CLEARANCE FOR THE OUTDOOR COIL AS STATED IN NOTE B, A REMOVABLE FENCE OR WALL PLACE REQUIRES NO CLEARANCE.
3. UNITS MAY BE INSTALLED ON COMBUSTIBLE FLOORS MADE FROM WOOD OR CLASS A, B OR C ROOF COVERING MATERIAL.

SERVICE VALVE CONNECTIONS			QTY
UNIT	SUCTION	LIQUID	
38AUZ*6	1-3/8 (34.9)	5/8 (15.9)	EA
38AUZ*6	1-3/8 (34.9)	[illegible]	EA

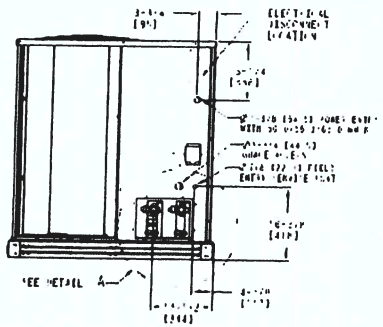

LEFT SIDE VIEW FOR 38AUD SYSTEMS

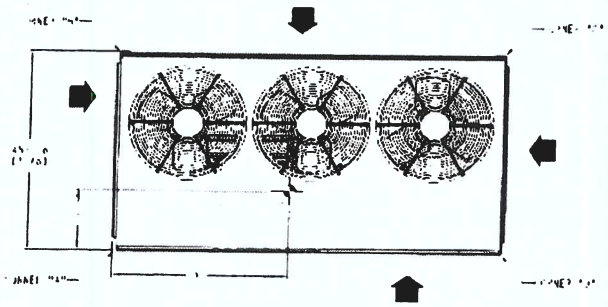

TOP VIEW

CENTER OF GRAVITY

AIR FLOW

DIMENSIONS IN [ ] ARE IN MM

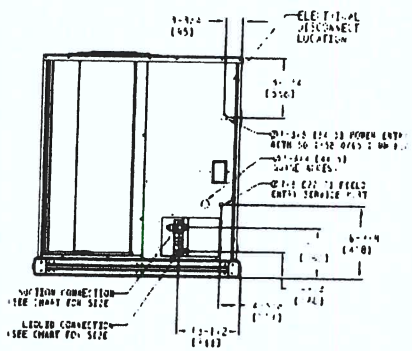

LEFT SIDE VIEW

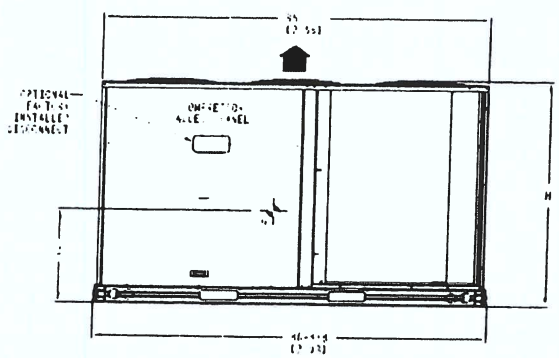

FRONT VIEW

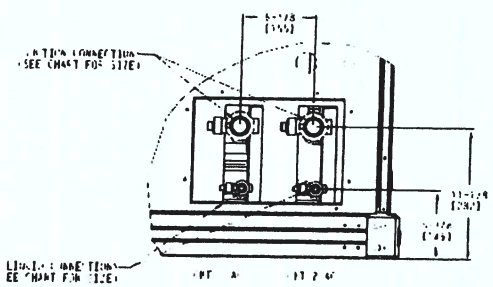

DETAIL A
(NOTE POSITION OF CKT 1)

DATE	SUPERSEDES			REV
[illegible]	[illegible]10	38AUZ, 38AUD CONDENSING UNIT	38AUD500584	F

GUIDE SPECIFICATIONS – 38AUDA16A0E5-0A0A0

Commercial Air-Cooled Condensing Units
HVAC Guide Specifications

Size: 16

Part 1: General

SYSTEM DESCRIPTION

1.01. Outdoor-mounted, air-cooled condensing unit suitable for on-the-ground or rooftop installation. Unit shall consist of a hermetic scroll air-conditioning compressor(s) assembly, an air-cooled coil, propeller-type condenser fans, and a control box. Unit shall discharge supply air upward as shown on contract drawings. Unit shall be used in a refrigeration circuit matched with a packaged air-handling unit.

QUALITY ASSURANCE

1.01. Unit shall be rated in accordance with AHRI Standard 360.
1.02. Unit construction shall comply with ANSI/ASHRAE 15 safety code latest revision and comply with NEC.
1.03. Unit shall be constructed in accordance with UL 1995 standard and shall carry the UL and UL, Canada label.
1.04. Unit cabinet shall be capable of withstanding 500-hour salt spray exposure per ASTM B117 (scribed specimen).
1.05. Air-cooled condenser coils for hermetic scroll compressor units (38AUZ) and 38AUD shall be leak tested at 150 psig, and pressure tested at 650 psig.
1.06. Unit shall be manufactured in a facility registered to ISO 9001:2000 manufacturing quality standard

DELIVERY, STORAGE, AND HANDLING

1.01. Unit shall be shipped as single package only, and shall be stored and handled according to unit manufacturer's recommendations.

WARRANTY (FOR INCLUSION BY SPECIFYING ENGINEER.)

Part 2: Products

EQUIPMENT

2.01. General:
- A. Factory-assembled, single piece, air-cooled condensing unit. Contained within the unit enclosure shall be all factory wiring, piping, controls, compressor, holding charge, and special features required prior to field start-up.

2.02. Unit Cabinet:
- A. Unit cabinet shall be constructed of galvanized steel, bonderized and coated with a prepainted baked enamel finish.
- B. A heavy-gauge roll-formed perimeter base rail with forklift slots and lifting holes shall be provided to facilitate rigging.

2.03. Condenser Fans:
- A. Condenser fans shall be direct driven, propeller type, discharging air vertically upward.
- B. Fan blades shall be balanced.
- C. Condenser fan discharge openings shall be equipped with PVC-coated steel wire safety guards.
- D. Condenser fan and motor shaft shall be corrosion resistant.

2.04. Compressor:

A. Compressor shall be of the hermetic scroll type.
B. Compressor shall be mounted on rubber grommets.
C. Compressors shall include overload protection.
D. Compressors shall be equipped with a crankcase heater.
E. Compressor shall be equipped with internal high pressure and high temperature protection.
F. 38AUZ*16 and 25 sizes shall use two scroll compressors manifold together.

2.05. Condenser Coils:

A. Standard Aluminum fin - Copper Tube Coils:
1. Standard evaporator and condenser coils shall have aluminum lanced plate fins mechanically bonded to seamless internally grooved copper tubes with all joints brazed.
2. Evaporator coils shall be leak tested to 150 psig, pressure tested to 450 psig, and qualified to UL 1995 burst test at 1775 psig.
3. Condenser coils shall be leak tested to 150 psig, pressure tested to 650 psig, and qualified to UL 1995 burst test at 1980 psig

B. Optional Copper-fin evaporator and condenser coils:
1. Shall be constructed of copper fins mechanically bonded to copper tubes and copper tube sheets.
2. Galvanized steel tube sheets shall not be acceptable.
3. A polymer strip shall prevent coil assembly from contacting the sheet metal coil pan to minimize potential for galvanic corrosion between coil and pan.

2.06. Refrigeration Components:

A. Refrigeration circuit components shall include liquid line service valve, suction line service valve, a full charge of compressor oil, and a partial holding charge of refrigerant.

2.07. Controls and Safeties.

A. Minimum control functions shall include:
1. Control wire terminal blocks.
2. Compressor lockout on auto-reset safety until reset from thermostat.
3. Each unit shall utilize the Comfort Alertt Diagnostic Board that provides:
a. System Pressure Trip fault code indication
b. Short Cycling fault code indication
c. Locked Rotor fault code indication
d. Open Circuit fault code indication
e. Reverse Phase 3 fault code indication
f. Welded Contactor fault code indication
g. Low Voltage fault code indication
h. Anti-short cycle protection
i. Phase reversal protection

B. Minimum safety devices which are equipped with automatic reset (after resetting first at thermostat), shall include:
1. High discharge pressure cutout.
2. Low pressure cutout.

2.08. Operating Characteristics:

A. The capacity of the condensing unit shall meet or exceed _____ Btuh at a suction temperature of _____F. The power consumption at full load shall not exceed _____ kW.
B. The combination of the condensing unit and the evaporator or fan coil unit shall have a total net cooling capacity of _____ Btuh or greater at conditions of _____ cfm entering-air temperature at the evaporator at _____F wet bulb and _____F dry bulb, and air entering the condensing unit at _____F.
C. The system shall have an EER of _____ Btuh/Watt or greater at standard AHRI conditions.
D. Standard unit shall be capable to operate up to 125_F (52_C) and down to 40_F (4_C)

2.09. Electrical Requirements:

A. Nominal unit electrical characteristics shall be _____ v, 3-ph, 60 Hz. The unit shall be capable of satisfactory operation within voltage limits of _____ v to _____ v.

B. Unit electrical power shall be single-point connection.

C. Unit control circuit shall contain a 24-v transformer for unit control.

2.10. Special Features:

A. Thermostat Controls:

1. Programmable multi-stage thermostat shall have 7-day clock, holiday scheduling, large backlit display, remote sensor capability, and Title 24 compliance.

2. Commercial Electronic Thermostat shall have 7-day time clock, auto-changeover, multi-stage capability, and large LCD (liquid crystal display) temperature display.

COMMERCIAL SPLIT SYSTEMS
38AUZ 6 to 20 Ton
38AUD 10 to 20 Ton
AIR-COOLED COOLING ONLY CONDENSING UNITS with PURON® REFRIGERANT

These light commercial air-cooled cooling only condensing units are easily connected by refrigerant lines and low voltage control wiring to matching Carrier packaged air-handling units or other suitable evaporator units. They are ideal for new construction or renovation applications where quality and performance are required.

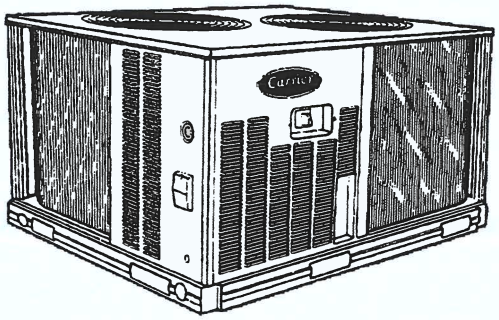

ASHRAE COMPLIANT

c UL us

AHRI CERTIFIED

Puron

Manufactured in facility registered to ISO 9001:2008 quality standard

BASE UNIT STANDARD FEATURES:

- Puron® (R-410A) HFC refrigerant partial charge
- Single circuit units (38AUZ) are available in 1 or 2 stage cooling
- Two circuit units (38AUD) are available in 2 stage cooling
- All models utilize round tube plate fin coils.
- Standard one year parts warranty and five year compressor parts warranty. Extended 2-5 year parts and 1-5 labor coverage are available.
- Cooling operating range up to 125°F (52°C) and down to 35°F (2°C) as standard.
- Available Motormaster® I control for cooling operation down to -20°F (-29°C)
- Fully hermetic scroll compressor with crankcase heater
- New terminal board facilitating simple safety circuit troubleshooting and simplified control box arrangement. 24-volt 75va control system
- High and low pressure switches.

    - LED Go-No-Go and fault code
    - Built in time guard anti-short cycle
    - Phase protection
    - Fault code retention logic
    - Low voltage compressor contactor protector
- UL and UL, Canada apply to standard units; 575-volt units UL, Canada only.
- Full perimeter base rails with built-in rigging adapters and fork truck slots
- Pre-painted exterior panels and primer-coated interior panels tested to 500 hours salt spray protection
- Direct drive permanently lubricated condenser fan motors
- All units factory run tested
- Compressors mounted on independent vibration isolators

7.5RFK BUILDING FIRST FLOOR AV ROOM 112321

Submittal Cover Sheet
Unit Report
Performance Summary Report
Acoustic Summary
Certified Drawings
Guide Specifications
Feature Sheet

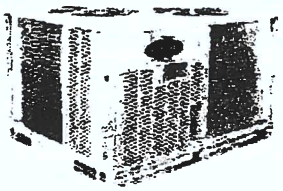

Outdoor Unit Parameters

Unit Quantity	1	
Unit Model	38AUD	
Unit Size	15 Tons	
Voltage	208-3-60	V-Ph-Hz
Condenser Coil	Cu/Cu	
No. of Stages	Dual Stage	

System Parameter

System Quantity	1	
Refrigerant Type	PURON	
Compressor Quantity	2	
Compressor Type	Scroll	
Std Capacity Steps	50, 100	
Std Min Outdoor Temp(Cooling)	35.0	°F
No. of Outdoor fans	3	

Outdoor Unit Dimensions and Weight

Unit Length	7' 2.4"	
Unit Width	3' 7.4"	
Unit Height	4' 2.4"	
Unit Shipping Weight	731	lb
Unit Operating Weight	731	lb

Warranty Information Outdoor (Note: for US & Canada only)
First Year - Parts Only (Standard)

NOTE: Please see Warranty Catalog 808-218 for explanation of policies and ordering methods.

Ordering Information

Part Number	Description	Quantity
Base Unit - Outdoor		
38AUDA16A0E5-0A0A0		
	Base Unit	1
	Cu/Cu Condensing Coil	
	Standard Refrigerant Options	1
	Service Options - None	1
	Electrical Options - None	1
	Packaging Options - Standard	1
	Standard Electrical Mechanical Controls	1
	Refrig Circ/Compressor Staging - Two Circuits/ Dual Stage	1
Accessories		1
EF680035	Liquid Line Solenoid Valve for Outdoor Unit	
EF680037	Liquid Line Solenoid Valve for Outdoor Unit	2
		2

KM680004	Sight Glass for Outdoor Unit	2
33CS2PP2S-03	Thermostat for Outdoor Unit	1

The 38AUZ/AUD are furnished with filter drier which is factory provided (field installed). Additional filter driers can be purchased separately through RCD (Replacement Components Division). See the Product Library for Replacement Filter Drier Information for more information.

System:

No. of Stages:	**38AUD016**	
System Quantity	**Dual Stage**	
Altitude	**1**	
EER @ ARI Conditions:	**600.0**	ft
Suction Line Loss	**13.4**	
	1.4	°F

Typical Liquid and Suction Line Sizing

Pipe Length	Liquid Line Size	Suction Line Size
0 - 25	3/8	7/8
26 - 50	3/8	1 1/8
51 - 75	1/2	1 1/8
76 - 100	1/2	1 1/8
101 - 125	1/2	1 3/8
126 - 150	5/8	1 3/8
151 - 175	5/8	1 3/8
176 - 200	5/8	1 3/8

Refer to the 38AU installation instructions for installation specific line sizing guidance

Outdoor Unit Parameters

Unit Quantity	**1**	
PartNumber	**38AUDA16A0E5-0A0A0**	
Unit Model	**38AUD**	
Unit Size	**15 Tons**	
Condenser Coil	**Cu/Cu**	
Voltage	**208-3-60**	V-Ph-Hz
Total Clg Cap (Gross)	**183.9**	MBH
SDT	**116.5**	°F
Clg Ent Air DB	**95.0**	°F
Saturated Suction Temp	**45.0**	°F

Outdoor Electrical Data

Unit Voltage	**208-3-60**	V-Ph-Hz
Unit MCA	**60.8**	Amps
Unit MOCP	**80.0**	Amps
Total Compressor Power of Unit	**13.00**	kW
Voltage Range Min	**187**	V
Voltage Range Max	**253**	V
Compressor RLA:	**25**	
Compressor LRA:	**164**	
Compressor Quantity	**2**	
Fan Motors Qty:	**3**	
Fan Motor FLA:	**1.5**	Amps

Notice: Outdoor unit elect data is based on 208-3-60
Control Panel SCCR: 5kA RMS at Rated Symmetrical Voltage

Acoustics

Sound Power Levels, db re 10E-12 Watts

FIOPS and Accessories Information

FIOPS	Quantity
Accessories	**Quantity**
Liquid Line Solenoid Valve for Outdoor Unit	2
Liquid Line Solenoid Valve for Outdoor Unit	2
Sight Glass for Outdoor Unit	2
Thermostat for Outdoor Unit	1

A-Weighted	Outdoor Unit (dB)	Indoor Unit (dB,Ducted)
Total Level	82.6	NA
63Hz	60.5	NA
125Hz	65.1	NA
250Hz	70.3	NA
500Hz	77.2	NA
1000Hz	78.0	NA
2000Hz	75.4	NA
4000Hz	71.2	NA
8000Hz	63.9	NA
Sound Message	Sound for AUD016	

Acoustic Notes:

1. 38AUZ/D/Q units sound ratings are in accordance with AHRI 270-2008 - Sound Rating of Outdoor Unitary Equipment
2. The acoustic center of the unit is located at the geometric center of the unit.

Advanced Acoustics Parameters

1. Unit height above ground: **1.0** ft
2. Horizontal distance from unit to receiver: **20.0** ft
3. Receiver height above ground: **5.7** ft
4. Height of obstruction: **0.0** ft
5. Horizontal dist. from obstruction to receiver: **0.0** ft
6. Horizontal dist. from unit to obstruction: **0.0** ft

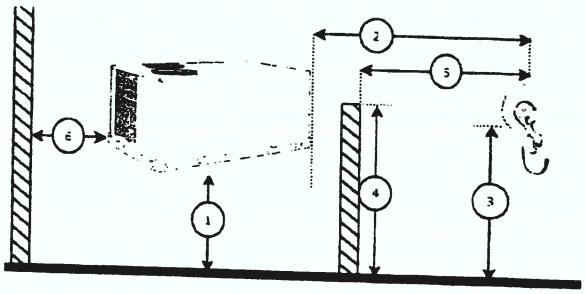

Detailed Acoustics Information

Octave Band Center Frequency, Hz	63	125	250	500	1k	2k	4k	8k	Overall
Sound Power Levels at Unit's Acoustic Center (Lw), dB	87	81	79	80	78	74	70	65	89
A-Wgted Sound Power Levels at Unit's Acoustic Center (LwA), dBA	61	65	70	77	78	75	71	64	83
Sound Press. Levels at Dist. Specified above (Lp), dB	62	57	55	56	54	50	46	41	65
A-Wgted Sound Press. Levels at Dist. Specified above (LpA), dBA	36	41	46	53	54	51	47	40	58

Calculation methods used in this program are patterned after the ASHRAE Guide; other ASHRAE Publications and the AHRI Acoustical Standards. While a very significant effort has been made to insure the technical accuracy of this program, it is assumed that the user is knowledgeable in the art of system sound estimation and is aware of the tolerances involved in real world acoustical estimation. This program makes certain assumptions as to the dominant sound sources and sound paths which may not always be appropriate to the real system being estimated. Because of this, no assurances can be offered that this software will always generate an accurate sound prediction from user supplied input data. If in doubt about the estimation of expected sound levels in a space, an Acoustical Engineer or a person with sound prediction expertise should be consulted.

Outdoor Unit Parameters:

Tag Name **7.5RFK BUILDING FIRST FLOOR AV ROOM 112321**

Unit Model **38AUD**
Unit Size ..... **15 Tons**
System Type ..... **Dx Cooling Only**
Refrigerant Type ..... **PURON**
Compressor Quantity **2**
Compressor Type ..... **Scroll**

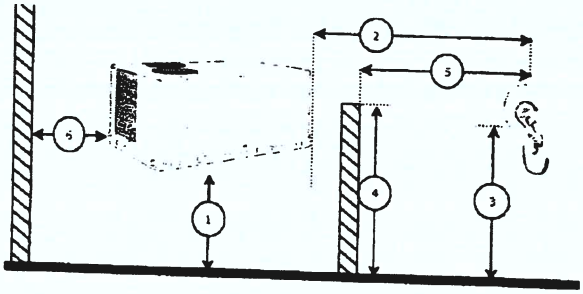

Advanced Accoustics Parameters

1. Unit height above ground ..... **1.0** ft
2. Horizontal distance from unit to receiver ..... **20.0** ft
3. Receiver height above ground ..... **5.7** ft
4. Height of obstruction ..... **0.0** ft
5. Horizontal distance from obstruction to receiver ..... **0.0** ft
6. Horizontal distance from unit to obstruction ..... **0.0** ft

Detailed Acoustics Information

Octave Band Center Frequency, Hz	63	125	250	500	1k	2k	4k	8k	Overall
Sound Power Levels at Unit's Acoustic Center (Lw), dB	87	81	79	80	78	74	70	65	89
A-Wgted Sound Power Levels at Unit's Acoustic Center (LwA), dBA	61	65	70	77	78	75	71	64	83
Sound Press. Levels at Dist. Specified above (Lp), dB	62	57	55	56	54	50	46	41	65
A-Wgted Sound Press. Levels at Dist. Specified above (LpA), dBA	36	41	46	53	54	51	47	40	58

Calculation methods used in this program are patterned after the ASHRAE Guide; other ASHRAE Publications and the AHRI Acoustical Standards. While a very significant effort has been made to insure the technical accuracy of this program, it is assumed that the user is knowledgeable in the art of system sound estimation and is aware of the tolerances involved in real world acoustical estimation. This program makes certain assumptions as to the dominant sound sources and sound paths which may not always be appropriate to the real system being estimated. Because of this, no assurances can be offered that this software will always generate an accurate sound prediction from user supplied input data. If in doubt about the estimation of expected sound levels in a space, an Acoustical Engineer or a person with sound prediction expertise should be consulted.

Acoustic Note:

1. 38AUZ/D/Q units sound ratings are in accordance with AHRI 270-2008 - Sound Rating of Outdoor Unitary Equipment
2. The acoustic center of the unit is located at the geometric center of the unit.
3. All estimated sound power levels, dB re 1 Picowatt should not be guaranteed or certified as being the actual sound power levels.

Acoustic Note:

1. Estimated Sound Power levels - dB re: 1 picowatt
2. Estimated Sound Pressure levels - dB re: 20 micropascal
3. Estimated sound levels given above are assumed to originate at the acoustic center of the unit. The acoustic center of the unit is located at the projection of the condensing unit's geometric center of its base.

4. Sound power levels shown above were determined in accordance with ARI standard 370 for large outdoor refrigeration and air conditioning equipment.

5. Calculation methods used in this program are patterned after the ASHRAE Guide; other ASHRAE Publications and the ARI Acoustical Standards. While a very significant effort has been made to insure the technical accuracy of this program, it is assumed that the user is knowledgeable in the art of system sound estimation and is aware of the tolerances involved in real world acoustical estimation. This program makes certain assumptions as to the dominant sound sources and sound paths which may not always be appropriate to the real system being estimated. Because of this, no assurances can be offered that this software will always generate an accurate sound prediction from user supplied input data. If in doubt about the estimation of expected sound levels in a space, an Acoustical Engineer or a person with sound prediction expertise should be consulted.

Certified Drawing for 7.5RFK BUILDING FIRST FLOOR AV ROOM 112321

Project: HA-1702-21-11 UOG IFB B21-17 PURCHASING HVAC EQUIP
Prepared By: BERNARD LLARENAS

12/01/2
02:1

UNIT	ELECTRICAL CHARACTERISTICS	STD UNIT AT		CORNER A		CORNER B		CORNER C		CORNER D		CENTER OF GRAVITY			UNIT HEIGHT
		LBS	KG	LBS	KG	LBS	KG	LBS	KG	LBS	KG	X	Y	Z	H
38AUZ*6 (HCHO)	208-230-3-60 460-3-60 575-3-60	[illegible]	[illegible]	[illegible]	[illegible]	[illegible]	[illegible]	[illegible]	[illegible]	[illegible]	[illegible]	[illegible]	[illegible]	[illegible]	[illegible]
38AUZ*6 (HCHO)	208-230-3-60 460-3-60 575-3-60	[illegible]	[illegible]	[illegible]	[illegible]	[illegible]	[illegible]	[illegible]	[illegible]	[illegible]	[illegible]	[illegible]	[illegible]	[illegible]	[illegible]
38AUZ*6 (RTPF)	208-230-3-60 460-3-60 575-3-60	[illegible]	[illegible]	[illegible]	[illegible]	[illegible]	[illegible]	[illegible]	[illegible]	[illegible]	[illegible]	[illegible]	[illegible]	[illegible]	[illegible]
38AUZ*6 (RTPF)	208-230-3-60 460-3-60 575-3-60	[illegible]	[illegible]	[illegible]	[illegible]	[illegible]	[illegible]	[illegible]	[illegible]	[illegible]	[illegible]	[illegible]	[illegible]	[illegible]	[illegible]

UNITED TECHNOLOGIES CARRIER

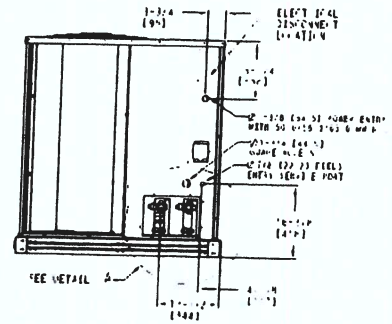

LEFT SIDE VIEW FOR 38AUD SYSTEMS

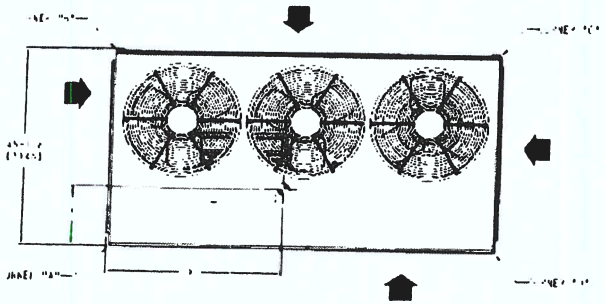

TOP VIEW

NOTES:
1. MINIMUM CLEARANCE LOCAL CODE OR INSPECTION MAY PREVAIL.
2. SECTION TO COMBUSTIBLE SURFACES: 0 INCHES.
3. OUTDOOR COIL: FOR PROPER AIR FLOW: 18 INCHES ONE SIDE, [illegible] INCHES THE OTHER. THE SIDE WITH THE OPTIONAL OVERHEAD CLEARANCE IS OPTIONAL.
4. OVERHEAD: 60 INCHES TO ACHIEVE PROPER OUTDOOR FAN DISCHARGE.
5. BETWEEN UNITS: CONTROL BOX SIDE: 42 INCHES PER NEC.
6. BETWEEN UNIT AND UNGROUNDED SURFACES: CONTROL BOX SIDE: 36 INCHES PER NEC.
7. BETWEEN UNIT AND BLOCK OR CONCRETE WALLS AND OTHER GROUNDED SURFACES: CONTROL BOX SIDE: 42 INCHES PER NEC.
8. WITH EXCEPTION OF THE CLEARANCE FOR THE OUTDOOR COIL AS STATED IN NOTE 2, A REMOVABLE FENCE OR WORKPLACE REQUIRES NO CLEARANCE.
9. UNITS MAY BE INSTALLED ON COMBUSTIBLE FLOORS MADE FROM WOOD OR CLASS A, B OR C ROOF COVERING MATERIAL.

SERVICE VALVE CONNECTIONS			QTY
UNIT	SUCTION	LIQUID	
38AUZ*6	1-3/8 [34.9]	[illegible] [15.9]	EA
38AUZ*6	1-3/8 [34.9]	[illegible] [15.9]	EA

CENTER OF GRAVITY

LINE TIP OF AIR FLOW

DIMENSIONS IN [ ] ARE IN MM

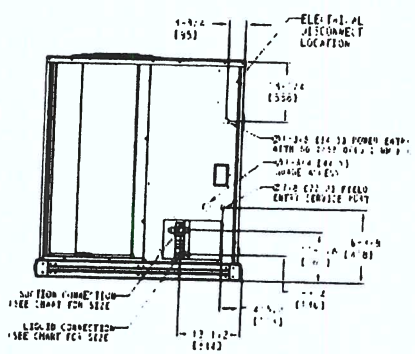

LEFT SIDE VIEW

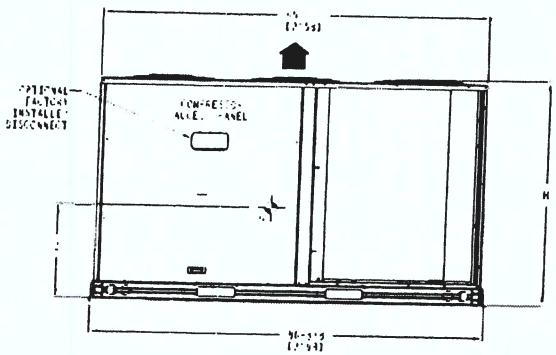

FRONT VIEW

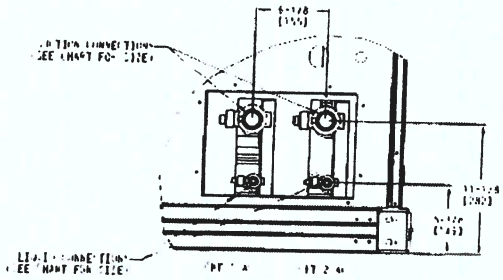

DETAIL A
(NOTE POSITION OF CKT 1)

DATE	SUPERSEDES			REV
[illegible]	[illegible]	38AUD, 38AUD CONDENSING UNIT	38AUD30503	F

Commercial Split Systems Builder 1.39z

OPA-PA-22-002-235

GUIDE SPECIFICATIONS – 38AUDA16A0E5-0A0A0

Commercial Air-Cooled Condensing Units
HVAC Guide Specifications

Size: 16

Part 1: General

SYSTEM DESCRIPTION

1.01. Outdoor-mounted, air-cooled condensing unit suitable for on-the-ground or rooftop installation. Unit shall consist of a hermetic scroll air-conditioning compressor(s) assembly, an air-cooled coil, propeller-type condenser fans, and a control box. Unit shall discharge supply air upward as shown on contract drawings. Unit shall be used in a refrigeration circuit matched with a packaged air-handling unit.

QUALITY ASSURANCE

1.01. Unit shall be rated in accordance with AHRI Standard 360.
1.02. Unit construction shall comply with ANSI/ASHRAE 15 safety code latest revision and comply with NEC.
1.03. Unit shall be constructed in accordance with UL 1995 standard and shall carry the UL and UL, Canada label.
1.04. Unit cabinet shall be capable of withstanding 500-hour salt spray exposure per ASTM B117 (scribed specimen).
1.05. Air-cooled condenser coils for hermetic scroll compressor units (38AUZ) and 38AUD shall be leak tested at 150 psig, and pressure tested at 650 psig.
1.06. Unit shall be manufactured in a facility registered to ISO 9001:2000 manufacturing quality standard.

DELIVERY, STORAGE, AND HANDLING

1.01. Unit shall be shipped as single package only, and shall be stored and handled according to unit manufacturer's recommendations.

WARRANTY (FOR INCLUSION BY SPECIFYING ENGINEER.)

Part 2: Products

EQUIPMENT

2.01. General:
- A. Factory-assembled, single piece, air-cooled condensing unit. Contained within the unit enclosure shall be all factory wiring, piping, controls, compressor, holding charge, and special features required prior to field start-up.

2.02. Unit Cabinet:
- A. Unit cabinet shall be constructed of galvanized steel, bonderized and coated with a prepainted baked enamel finish.
- B. A heavy-gauge roll-formed perimeter base rail with forklift slots and lifting holes shall be provided to facilitate rigging.

2.03. Condenser Fans:
- A. Condenser fans shall be direct driven, propeller type, discharging air vertically upward.
- B. Fan blades shall be balanced.
- C. Condenser fan discharge openings shall be equipped with PVC-coated steel wire safety guards.
- D. Condenser fan and motor shaft shall be corrosion resistant.

2.04. Compressor:
- A. Compressor shall be of the hermetic scroll type.

B. Compressor shall be mounted on rubber grommets.
C. Compressors shall include overload protection.
D. Compressors shall be equipped with a crankcase heater.
E. Compressor shall be equipped with internal high pressure and high temperature protection.
F. 38AUZ*16 and 25 sizes shall use two scroll compressors manifold together.

2.05. Condenser Coils:
A. Standard Aluminum fin - Copper Tube Coils:
1. Standard evaporator and condenser coils shall have aluminum lanced plate fins mechanically bonded to seamless internally grooved copper tubes with all joints brazed.
2. Evaporator coils shall be leak tested to 150 psig, pressure tested to 450 psig, and qualified to UL 1995 burst test at 1775 psig
3. Condenser coils shall be leak tested to 150 psig, pressure tested to 650 psig, and qualified to UL 1995 burst test at 1980 psig.
B. Optional Copper-fin evaporator and condenser coils:
1. Shall be constructed of copper fins mechanically bonded to copper tubes and copper tube sheets.
2. Galvanized steel tube sheets shall not be acceptable.
3. A polymer strip shall prevent coil assembly from contacting the sheet metal coil pan to minimize potential for galvanic corrosion between coil and pan.

2.06. Refrigeration Components:
A. Refrigeration circuit components shall include liquid line service valve, suction line service valve, a full charge of compressor oil, and a partial holding charge of refrigerant.

2.07. Controls and Safeties:
A. Minimum control functions shall include.
1. Control wire terminal blocks.
2. Compressor lockout on auto-reset safety until reset from thermostat.
3 Each unit shall utilize the Comfort Alertt Diagnostic Board that provides.
a. System Pressure Trip fault code indication
b. Short Cycling fault code indication
c. Locked Rotor fault code indication
d. Open Circuit fault code indication
e. Reverse Phase 3 fault code indication
f. Welded Contactor fault code indication
g. Low Voltage fault code indication
h. Anti-short cycle protection
i. Phase reversal protection
B. Minimum safety devices which are equipped with automatic reset (after resetting first at thermostat), shall include:
1. High discharge pressure cutout.
2. Low pressure cutout.

2.08. Operating Characteristics:
A. The capacity of the condensing unit shall meet or exceed _____ Btuh at a suction temperature of _____F. The power consumption at full load shall not exceed _____ kW.
B. The combination of the condensing unit and the evaporator or fan coil unit shall have a total net cooling capacity of _____ Btuh or greater at conditions of _____ cfm entering-air temperature at the evaporator at _____F wet bulb and _____F dry bulb, and air entering the condensing unit at _____F.
C. The system shall have an EER of _____ Btuh/Watt or greater at standard AHRI conditions.
D. Standard unit shall be capable to operate up to 125_F (52_C) and down to 40_F (4_C)

2.09. Electrical Requirements:
A. Nominal unit electrical characteristics shall be _____ v, 3-ph, 60 Hz. The unit shall be capable of satisfactory operation

within voltage limits of ____ v to _____ v.

B. Unit electrical power shall be single-point connection.

C. Unit control circuit shall contain a 24-v transformer for unit control.

2.10. Special Features:

A. Thermostat Controls:

1. Programmable multi-stage thermostat shall have 7-day clock, holiday scheduling, large backlit display, remote sensor capability, and Title 24 compliance.

2. Commercial Electronic Thermostat shall have 7-day time clock, auto-changeover, multi-stage capability, and large LCD (liquid crystal display) temperature display.

COMMERCIAL SPLIT SYSTEMS
38AUZ 6 to 20 Ton
38AUD 10 to 20 Ton
AIR-COOLED COOLING ONLY CONDENSING UNITS with PURON® REFRIGERANT

These light commercial air-cooled cooling only condensing units are easily connected by refrigerant lines and low voltage control wiring to matching Carrier packaged air-handling units or other suitable evaporator units. They are ideal for new construction or renovation applications where quality and performance are required.

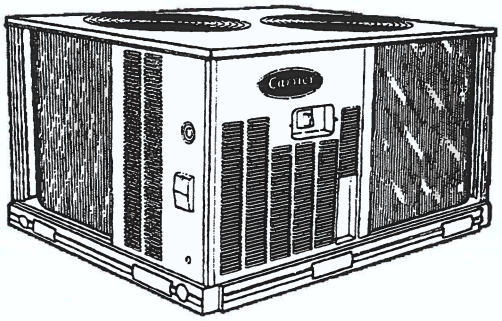

ASHRAE

COMPLIANT

Manufactured in facility registered to ISO 9001:2008 quality standard

BASE UNIT STANDARD FEATURES:

- Puron® (R-410A) HFC refrigerant partial charge
- Single circuit units (38AUZ) are available in 1 or 2 stage cooling
- Two circuit units (38AUD) are available in 2 stage cooling
- All models utilize round tube plate fin coils.
- Standard one year parts warranty and five year compressor parts warranty. Extended 2-5 year parts and 1-5 labor coverage are available.
- Cooling operating range up to 125°F (52°C) and down to 35°F (2°C) as standard.
- Available Motormaster® I control for cooling operation down to -20°F (-29°C)
- Fully hermetic scroll compressor with crankcase heater
- New terminal board facilitating simple safety circuit troubleshooting and simplified control box arrangement. 24-volt 75va control system
- High and low pressure switches.

- Comfort Alert™ Diagnostic Board:
  - LED Go-No-Go and fault code
  - Built in time guard anti-short cycle
  - Phase protection
  - Fault code retention logic
  - Low voltage compressor contactor protector
- UL and UL, Canada apply to standard units; 575-volt units UL, Canada only.
- Full perimeter base rails with built-in rigging adapters and fork truck slots
- Pre-painted exterior panels and primer-coated interior panels tested to 500 hours salt spray protection
- Direct drive permanently lubricated condenser fan motors
- All units factory run tested
- Compressors mounted on independent vibration isolators

7.5RFK BUILDING FIRST FLOOR OFFICES 112321

Submittal Cover Sheet
Unit Report
Performance Summary Report
Acoustic Summary
Certified Drawings
Guide Specifications
Feature Sheet

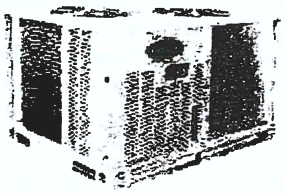

Outdoor Unit Parameters

Unit Quantity	1	
Unit Model	38AUD	
Unit Size	20 Tons	
Voltage	208-3-60	V-Ph-Hz
Condenser Coil	Cu/Cu	
No of Stages:	Dual Stage	

System Parameter

System Quantity	1	
Refrigerant Type	PURON	
Compressor Quantity	2	
Compressor Type	Scroll	
Std Capacity Steps:	50, 100	
Std Min Outdoor Temp(Cooling)	35.0	°F
No of Outdoor fans:	4	

Outdoor Unit Dimensions and Weight

Unit Length	7' 2.1"	
Unit Width	5' 7.1"	
Unit Height	4' 2.4"	
Unit Shipping Weight	978	lb
Unit Operating Weight	978	lb

Warranty Information Outdoor (Note: for US & Canada only)
First Year - Parts Only (Standard)

NOTE: Please see Warranty Catalog 808-218 for explanation of policies and ordering methods.

Ordering Information

Part Number	Description	Quantity
Base Unit - Outdoor		
38AUDA25A0E5-0A0A0		
	Base Unit	1
	Cu/Cu Condensing Coil	
	Standard Refrigerant Options	1
	Service Options - None	1
	Electrical Options - None	1
	Packaging Options - Standard	1
	Standard Electrical Mechanical Controls	1
	Refrig Circ/Compressor Staging - Two Circuits/ Dual Stage	1
Accessories		1
EF680035	Liquid Line Solenoid Valve for Outdoor Unit	
EF680037	Liquid Line Solenoid Valve for Outdoor Unit	2
		2

KM680004	Sight Glass for Outdoor Unit	2
33CS2PP2S-03	Thermostat for Outdoor Unit	1

The 38AUZ/AUD are furnished with filter drier which is factory provided (field installed) Additional filter driers can be purchased separately through RCD (Replacement Components Division) See the Product Library for Replacement Filter Drier Information for more information.

System:

No. of Stages	38AUD025	
System Quantity	Dual Stage	
Altitude	1	
EER @ ARI Conditions	600.0	ft
Suction Line Loss:	13.6	
Condensing unit is rated in accordance with ARI 365	1.4	°F

Typical Liquid and Suction Line Sizing

Pipe Length	Liquid Line Size	Suction Line Size
0 - 25	3/8	1 1/8
26 - 50	1/2	1 1/8
51 - 75	5/8	1 3/8
76 - 100	5/8	1 3/8
101 - 125	5/8	1 3/8
126 - 150	5/8	1 3/8
151 - 175	5/8	1 3/8
176 - 200	3/4	1 3/8

Refer to the 38AU installation instructions for installation specific line sizing guidance

Outdoor Unit Parameters

Unit Quantity	1	
PartNumber	38AUDA25A0E5-0A0A0	
Unit Model	38AUD	
Unit Size	20 Tons	
Condenser Coil	Cu/Cu	
Voltage:	208-3-60	V-Ph-Hz
Total Clg Cap (Gross)	240.0	MBH
SDT:	119.2	°F
Clg Ent Air DB	95.0	°F
Saturated Suction Temp	45.0	°F

Outdoor Electrical Data

Unit Voltage	208-3-60	V-Ph-Hz
Unit MCA	73.7	Amps
Unit MOCP	100.0	Amps
Total Compressor Power of Unit	16.70	kW
Voltage Range Min.	187	V
Voltage Range Max	253	V
Compressor RLA:	30.1	
Compressor LRA:	225	
Compressor Quantity	2	
Fan Motors Qty	4	
Fan Motor FLA:	1.5	Amps

Notice. Outdoor unit elect data is based on 208-3-60
Control Panel SCCR 5kA RMS at Rated Symmetrical Voltage

Acoustics

Sound Power Levels, db re 10E-12 Watts

FIOPS and Accessories Information

FIOPS	Quantity
Accessories	**Quantity**
Liquid Line Solenoid Valve for Outdoor Unit	2
Liquid Line Solenoid Valve for Outdoor Unit	2
Sight Glass for Outdoor Unit	2

Thermostat for Outdoor Unit	1

A-Weighted	Outdoor Unit (dB)	Indoor Unit (dB,Ducted)
Total Level	85.2	NA
63Hz	64.8	NA
125Hz	68.9	NA
250Hz	71.4	NA
500Hz	82.8	NA
1000Hz	79.0	NA
2000Hz	74.2	NA
4000Hz	69.0	NA
8000Hz	61.9	NA
Sound Message	Sound for AUD025	

Acoustic Notes:

1 38AUZ/D/Q units sound ratings are in accordance with AHRI 270-2008 - Sound Rating of Outdoor Unitary Equipment
2 The acoustic center of the unit is located at the geometric center of the unit

Advanced Acoustics Parameters

1. Unit height above ground..... 1.0 ft
2. Horizontal distance from unit to receiver:.. 20.0 ft
3. Receiver height above ground:..... 5.7 ft
4. Height of obstruction. ..... 0.0 ft
5. Horizontal dist from obstruction to receiver ..... 0.0 ft
6. Horizontal dist from unit to obstruction..... 0.0 ft

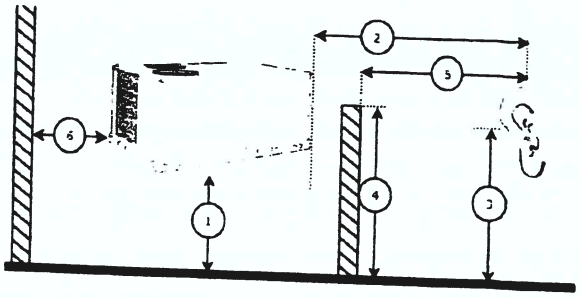

Detailed Acoustics Information

Octave Band Center Frequency, Hz	63	125	250	500	1k	2k	4k	8k	Overall
Sound Power Levels at Unit's Acoustic Center (Lw) dB	91	85	80	86	79	73	68	63	93
A-Wgted Sound Power Levels at Unit's Acoustic Center (LwA). dBA	65	69	71	83	79	74	69	62	85
Sound Press Levels at Dist. Specified above (Lp). dB	66	60	55	61	54	48	43	38	69
A-Wgted Sound Press. Levels at Dist Specified above (LpA). dBA	40	44	47	58	54	50	44	37	61

Calculation methods used in this program are patterned after the ASHRAE Guide; other ASHRAE Publications and the AHRI Acoustical Standards While a very significant effort has been made to insure the technical accuracy of this program, it is assumed that the user is knowledgeable in the art of system sound estimation and is aware of the tolerances involved in real world acoustical estimation This program makes certain assumptions as to the dominant sound sources and sound paths which may not always be appropriate to the real system being estimated. Because of this no assurances can be offered that this software will always generate an accurate sound prediction from user supplied input data If in doubt about the estimation of expected sound levels in a space, an Acoustical Engineer or a person with sound prediction expertise should be consulted

Outdoor Unit Parameters:

Tag Name: **7.5RFK BUILDING FIRST FLOOR OFFICES 112321**

Unit Model: **38AUD**
Unit Size: **20 Tons**
System Type: **Dx Cooling Only**
Refrigerant Type: **PURON**
Compressor Quantity: **2**
Compressor Type: **Scroll**

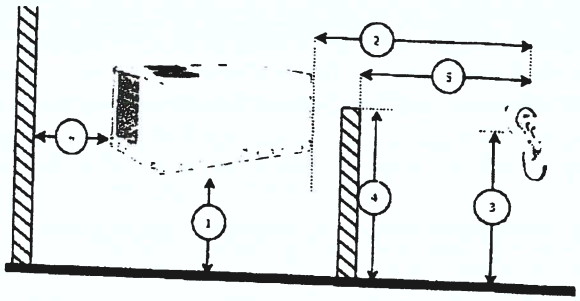

Advanced Accoustics Parameters

1. Unit height above ground: **1.0** ft
2. Horizontal distance from unit to receiver: **20.0** ft
3. Receiver height above ground: **5.7** ft
4. Height of obstruction: **0.0** ft
5. Horizontal distance from obstruction to receiver: **0.0** ft
6. Horizontal distance from unit to obstruction: **0.0** ft

Detailed Acoustics Information

Octave Band Center Frequency, Hz	63	125	250	500	1k	2k	4k	8k	Overall
Sound Power Levels at Unit's Acoustic Center (Lw), dB	91	85	80	86	79	73	68	63	93
A-Wgted Sound Power Levels at Unit's Acoustic Center (LwA), dBA	65	69	71	83	79	74	69	62	85
Sound Press Levels at Dist Specified above (Lp) dB	66	60	55	61	54	48	43	38	69
A-Wgted Sound Press Levels at Dist Specified above (LpA), dBA	40	44	47	58	54	50	44	37	61

Calculation methods used in this program are patterned after the ASHRAE Guide other ASHRAE Publications and the AHRI Acoustical Standards While a very significant effort has been made to insure the technical accuracy of this program it is assumed that the user is knowledgeable in the art of system sound estimation and is aware of the tolerances involved in real world acoustical estimation This program makes certain assumptions as to the dominant sound sources and sound paths which may not always be appropriate to the real system being estimated Because of this, no assurances can be offered that this software will always generate an accurate sound prediction from user supplied input data If in doubt about the estimation of expected sound levels in a space an Acoustical Engineer or a person with sound prediction expertise should be consulted

Acoustic Note:

1. 38AUZ/D/Q units sound ratings are in accordance with AHRI 270-2008 - Sound Rating of Outdoor Unitary Equipment
2. The acoustic center of the unit is located at the geometric center of the unit.
3. All estimated sound power levels dB re 1 Picowatt should not be guaranteed or certified as being the actual sound power levels

Acoustic Note:

1. Estimated Sound Power levels - dB re 1 picowatt
2. Estimated Sound Pressure levels - dB re: 20 micropascal
3. Estimated sound levels given above are assumed to originate at the acoustic center of the unit The acoustic center of the unit is located at the projection of the condensing unit's geometric center of its base

4. Sound power levels shown above were determined in accordance with ARI standard 370 for large outdoor refrigeration and air conditioning equipment.

5 Calculation methods used in this program are patterned after the ASHRAE Guide, other ASHRAE Publications and the ARI Acoustical Standards. While a very significant effort has been made to insure the technical accuracy of this program, it is assumed that the user is knowledgeable in the art of system sound estimation and is aware of the tolerances involved in real world acoustical estimation. This program makes certain assumptions as to the dominant sound sources and sound paths which may not always be appropriate to the real system being estimated. Because of this, no assurances can be offered that this software will always generate an accurate sound prediction from user supplied input data. If in doubt about the estimation of expected sound levels in a space, an Acoustical Engineer or a person with sound prediction expertise should be consulted.

Certified Drawing for 7.5RFK BUILDING FIRST FLOOR OFFICES 112321

Project: HA-1702-21-11 UOG IFB B21-17 PURCHASING HVAC EQUIP

Prepared By: BERNARD LLARENAS

12/01/2021

02:16PM

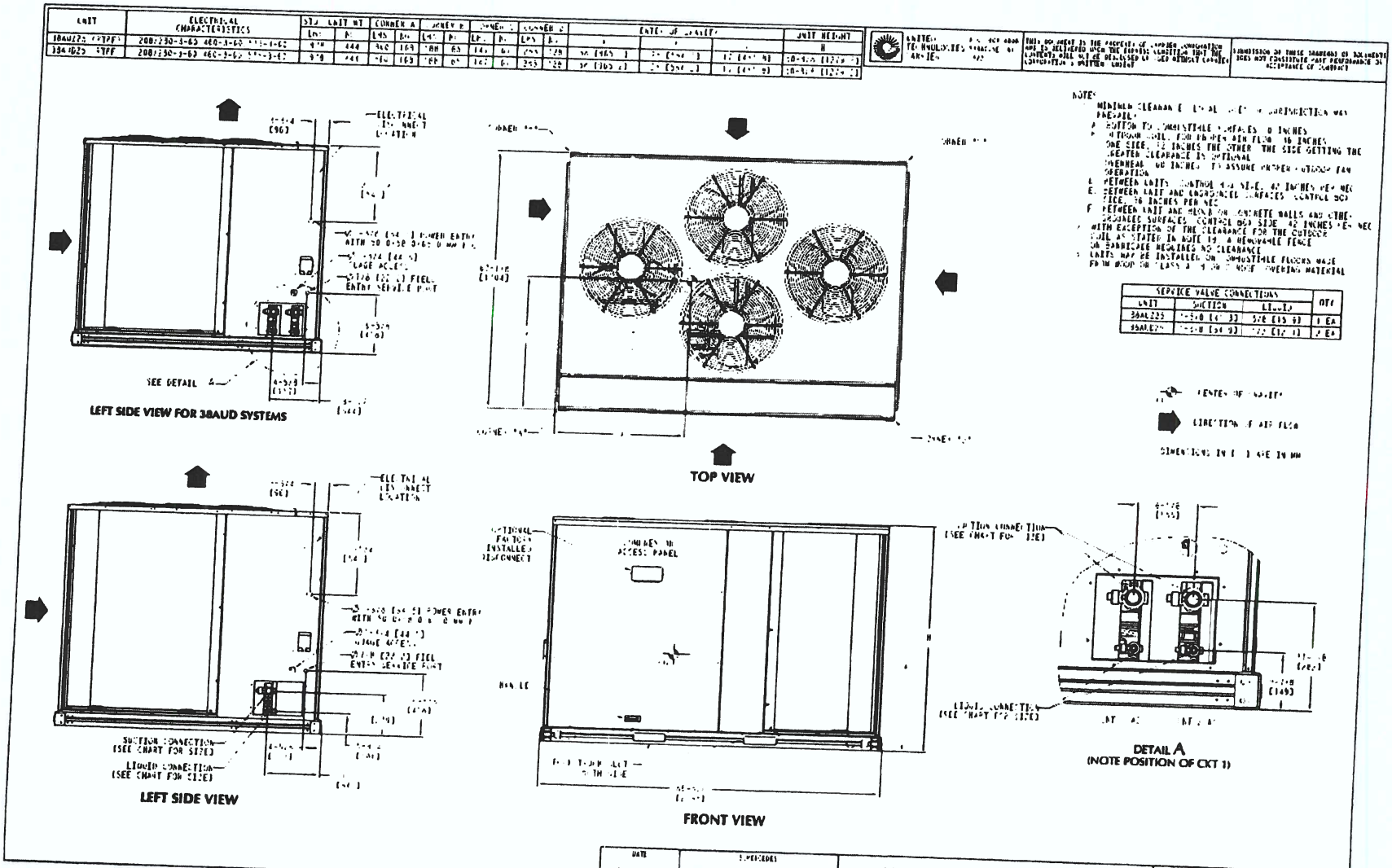

Commercial Split Systems Builder 1.39z

OPA-PA-22-002-248

GUIDE SPECIFICATIONS – 38AUDA25A0E5-0A0A0

Commercial Air-Cooled Condensing Units
HVAC Guide Specifications

Size: 25

Part 1: General

SYSTEM DESCRIPTION

1.01. Outdoor-mounted, air-cooled condensing unit suitable for on-the-ground or rooftop installation. Unit shall consist of a hermetic scroll air-conditioning compressor(s) assembly, an air-cooled coil, propeller-type condenser fans, and a control box. Unit shall discharge supply air upward as shown on contract drawings. Unit shall be used in a refrigeration circuit matched with a packaged air-handling unit

QUALITY ASSURANCE

1.01. Unit shall be rated in accordance with AHRI Standard 360.
1.02. Unit construction shall comply with ANSI/ASHRAE 15 safety code latest revision and comply with NEC.
1.03. Unit shall be constructed in accordance with UL 1995 standard and shall carry the UL and UL, Canada label.
1.04 Unit cabinet shall be capable of withstanding 500-hour salt spray exposure per ASTM B117 (scribed specimen).
1.05. Air-cooled condenser coils for hermetic scroll compressor units (38AUZ) and 38AUD shall be leak tested at 150 psig, and pressure tested at 650 psig.
1.06. Unit shall be manufactured in a facility registered to ISO 9001:2000 manufacturing quality standard.

DELIVERY, STORAGE, AND HANDLING

1.01. Unit shall be shipped as single package only, and shall be stored and handled according to unit manufacturer's recommendations.

WARRANTY (FOR INCLUSION BY SPECIFYING ENGINEER.)

Part 2: Products

EQUIPMENT

2.01. General:
- A. Factory-assembled, single piece, air-cooled condensing unit. Contained within the unit enclosure shall be all factory wiring, piping, controls, compressor, holding charge, and special features required prior to field start-up.

2.02. Unit Cabinet:
- A. Unit cabinet shall be constructed of galvanized steel bonderized and coated with a prepainted baked enamel finish.
- B. A heavy-gauge roll-formed perimeter base rail with forklift slots and lifting holes shall be provided to facilitate rigging.

2.03. Condenser Fans:
- A. Condenser fans shall be direct driven, propeller type, discharging air vertically upward.
- B. Fan blades shall be balanced.
- C. Condenser fan discharge openings shall be equipped with PVC-coated steel wire safety guards.
- D. Condenser fan and motor shaft shall be corrosion resistant.

2.04. Compressor:
- A. Compressor shall be of the hermetic scroll type.

B. Compressor shall be mounted on rubber grommets.
C. Compressors shall include overload protection.
D. Compressors shall be equipped with a crankcase heater.
E. Compressor shall be equipped with internal high pressure and high temperature protection.
F. 38AUZ*16 and 25 sizes shall use two scroll compressors manifold together.

2.05. Condenser Coils:
A. Standard Aluminum fin - Copper Tube Coils:
1. Standard evaporator and condenser coils shall have aluminum lanced plate fins mechanically bonded to seamless internally grooved copper tubes with all joints brazed.
2. Evaporator coils shall be leak tested to 150 psig, pressure tested to 450 psig, and qualified to UL 1995 burst test at 1775 psig.
3. Condenser coils shall be leak tested to 150 psig, pressure tested to 650 psig, and qualified to UL 1995 burst test at 1980 psig.
B. Optional Copper-fin evaporator and condenser coils:
1. Shall be constructed of copper fins mechanically bonded to copper tubes and copper tube sheets.
2. Galvanized steel tube sheets shall not be acceptable.
3. A polymer strip shall prevent coil assembly from contacting the sheet metal coil pan to minimize potential for galvanic corrosion between coil and pan.

2.06 Refrigeration Components:
A. Refrigeration circuit components shall include liquid line service valve, suction line service valve, a full charge of compressor oil, and a partial holding charge of refrigerant.

2.07. Controls and Safeties:
A. Minimum control functions shall include:
1. Control wire terminal blocks.
2. Compressor lockout on auto-reset safety until reset from thermostat.
3. Each unit shall utilize the Comfort Alertt Diagnostic Board that provides:
a. System Pressure Trip fault code indication
b. Short Cycling fault code indication
c. Locked Rotor fault code indication
d. Open Circuit fault code indication
e. Reverse Phase 3 fault code indication
f. Welded Contactor fault code indication
g. Low Voltage fault code indication
h. Anti-short cycle protection
i. Phase reversal protection
B. Minimum safety devices which are equipped with automatic reset (after resetting first at thermostat), shall include:
1. High discharge pressure cutout.
2. Low pressure cutout.

2.08. Operating Characteristics:
A. The capacity of the condensing unit shall meet or exceed _____ Btuh at a suction temperature of _____ F. The power consumption at full load shall not exceed _____ kW.
B. The combination of the condensing unit and the evaporator or fan coil unit shall have a total net cooling capacity of _____ Btuh or greater at conditions of _____ cfm entering-air temperature at the evaporator at _____ F wet bulb and _____ F dry bulb, and air entering the condensing unit at _____ F.
C. The system shall have an EER of _____ Btuh/Watt or greater at standard AHRI conditions.
D. Standard unit shall be capable to operate up to 125_F (52_C) and down to 40_F (4_C)

2.09. Electrical Requirements:
A. Nominal unit electrical characteristics shall be _____ v, 3-ph, 60 Hz. The unit shall be capable of satisfactory operation

within voltage limits of ____ v to _____ v.

B. Unit electrical power shall be single-point connection.

C. Unit control circuit shall contain a 24-v transformer for unit control.

2.10. Special Features:

A. Thermostat Controls:

1. Programmable multi-stage thermostat shall have 7-day clock, holiday scheduling, large backlit display, remote sensor capability, and Title 24 compliance.
2. Commercial Electronic Thermostat shall have 7-day time clock, auto-changeover, multi-stage capability, and large LCD (liquid crystal display) temperature display.

Performance Summary For LECTURE HALL AUDITORIUM 112321

Project: HA-1702-21-11 UOG IFB B21-17 PURCHASING HVAC EQUIP
Prepared By: BERNARD LLARENAS

02:16PM

Advanced Acoustics Parameters

1. Unit height above ground..... **1.0** ft
2. Horizontal distance from unit to receiver..... **20.0** ft
3. Receiver height above ground..... **5.7** ft
4. Height of obstruction:..... **0.0** ft
5. Horizontal dist. from obstruction to receiver:..... **0.0** ft
6. Horizontal dist. from unit to obstruction..... **0.0** ft

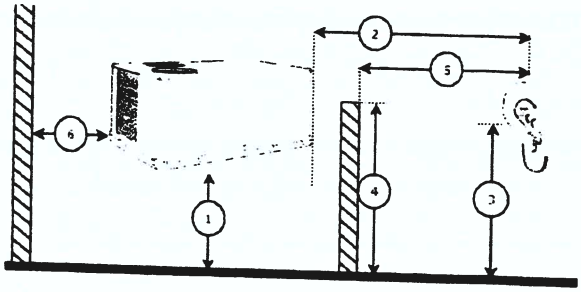

Detailed Acoustics Information

Octave Band Center Frequency, Hz	63	125	250	500	1k	2k	4k	8k	Overall
Sound Power Levels at Unit's Acoustic Center (Lw), dB	91	85	80	86	79	73	68	63	93
A-Wgted Sound Power Levels at Unit's Acoustic Center (LwA), dBA	65	69	71	83	79	74	69	62	85
Sound Press. Levels at Dist. Specified above (Lp), dB	66	60	55	61	54	48	43	38	69
A-Wgted Sound Press. Levels at Dist. Specified above (LpA), dBA	40	44	47	58	54	50	44	37	61

Calculation methods used in this program are patterned after the ASHRAE Guide, other ASHRAE Publications and the AHRI Acoustical Standards. While a very significant effort has been made to insure the technical accuracy of this program, it is assumed that the user is knowledgeable in the art of system sound estimation and is aware of the tolerances involved in real world acoustical estimation. This program makes certain assumptions as to the dominant sound sources and sound paths which may not always be appropriate to the real system being estimated. Because of this, no assurances can be offered that this software will always generate an accurate sound prediction from user supplied input data. If in doubt about the estimation of expected sound levels in a space, an Acoustical Engineer or a person with sound prediction expertise should be consulted.

Acoustic Summary For LECTURE HALL AUDITORIUM 112321

Project: HA-1702-21-11 UOG IFB B21-17 PURCHASING HVAC EQUIP
Prepared By: BERNARD LLARENAS

02:16PM

Outdoor Unit Parameters:

Tag Name: **LECTURE HALL AUDITORIUM 112321**
Unit Model: **38AUD**
Unit Size: **20 Tons**
System Type: **Dx Cooling Only**
Refrigerant Type: **PURON**
Compressor Quantity: **2**
Compressor Type: **Scroll**

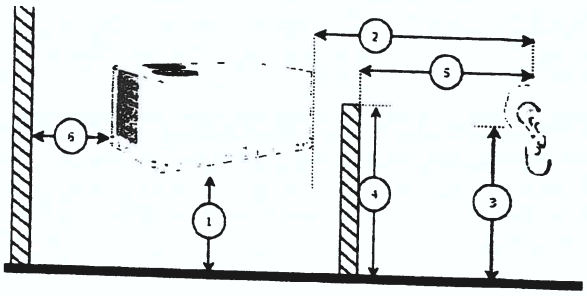

Advanced Accoustics Parameters

1. Unit height above ground: **1.0** ft
2. Horizontal distance from unit to receiver: **20.0** ft
3. Receiver height above ground: **5.7** ft
4. Height of obstruction: **0.0** ft
5. Horizontal distance from obstruction to receiver: **0.0** ft
6. Horizontal distance from unit to obstruction: **0.0** ft

Detailed Acoustics Information

Octave Band Center Frequency, Hz	63	125	250	500	1k	2k	4k	8k	Overall
Sound Power Levels at Unit's Acoustic Center (Lw), dB	91	85	80	86	79	73	68	63	93
A-Wgted Sound Power Levels at Unit's Acoustic Center (LwA), dBA	65	69	71	83	79	74	69	62	85
Sound Press Levels at Dist. Specified above (Lp), dB	66	60	55	61	54	48	43	38	69
A-Wgted Sound Press Levels at Dist. Specified above (LpA), dBA	40	44	47	58	54	50	44	37	61

Calculation methods used in this program are patterned after the ASHRAE Guide, other ASHRAE Publications and the AHRI Acoustical Standards While a very significant effort has been made to insure the technical accuracy of this program, it is assumed that the user is knowledgeable in the art of system sound estimation and is aware of the tolerances involved in real world acoustical estimation This program makes certain assumptions as to the dominant sound sources and sound paths which may not always be appropriate to the real system being estimated Because of this, no assurances can be offered that this software will always generate an accurate sound prediction from user supplied input data. If in doubt about the estimation of expected sound levels in a space, an Acoustical Engineer or a person with sound prediction expertise should be consulted

Acoustic Note:

1. 38AUZ/D/Q units sound ratings are in accordance with AHRI 270-2008 - Sound Rating of Outdoor Unitary Equipment
2. The acoustic center of the unit is located at the geometric center of the unit.
3. All estimated sound power levels, dB re 1 Picowatt should not be guaranteed or certified as being the actual sound power levels.

Acoustic Note:

1. Estimated Sound Power levels - dB re. 1 picowatt
2. Estimated Sound Pressure levels - dB re: 20 micropascal
3. Estimated sound levels given above are assumed to originate at the acoustic center of the unit. The acoustic center of the unit is located at the projection of the condensing unit's geometric center of its base

4. Sound power levels shown above were determined in accordance with ARI standard 370 for large outdoor refrigeration and air conditioning equipment.

5. Calculation methods used in this program are patterned after the ASHRAE Guide; other ASHRAE Publications and the ARI Acoustical Standards. While a very significant effort has been made to insure the technical accuracy of this program, it is assumed that the user is knowledgeable in the art of system sound estimation and is aware of the tolerances involved in real world acoustical estimation. This program makes certain assumptions as to the dominant sound sources and sound paths which may not always be appropriate to the real system being estimated. Because of this, no assurances can be offered that this software will always generate an accurate sound prediction from user supplied input data. If in doubt about the estimation of expected sound levels in a space, an Acoustical Engineer or a person with sound prediction expertise should be consulted.

Certified Drawing for LECTURE HALL AUDITORIUM 112321

Project: HA-1702-21-11 UOG IFB B21-17 PURCHASING HVAC EQUIP

Prepared By: BERNARD LLARENAS

12/01/2021

02:16PM

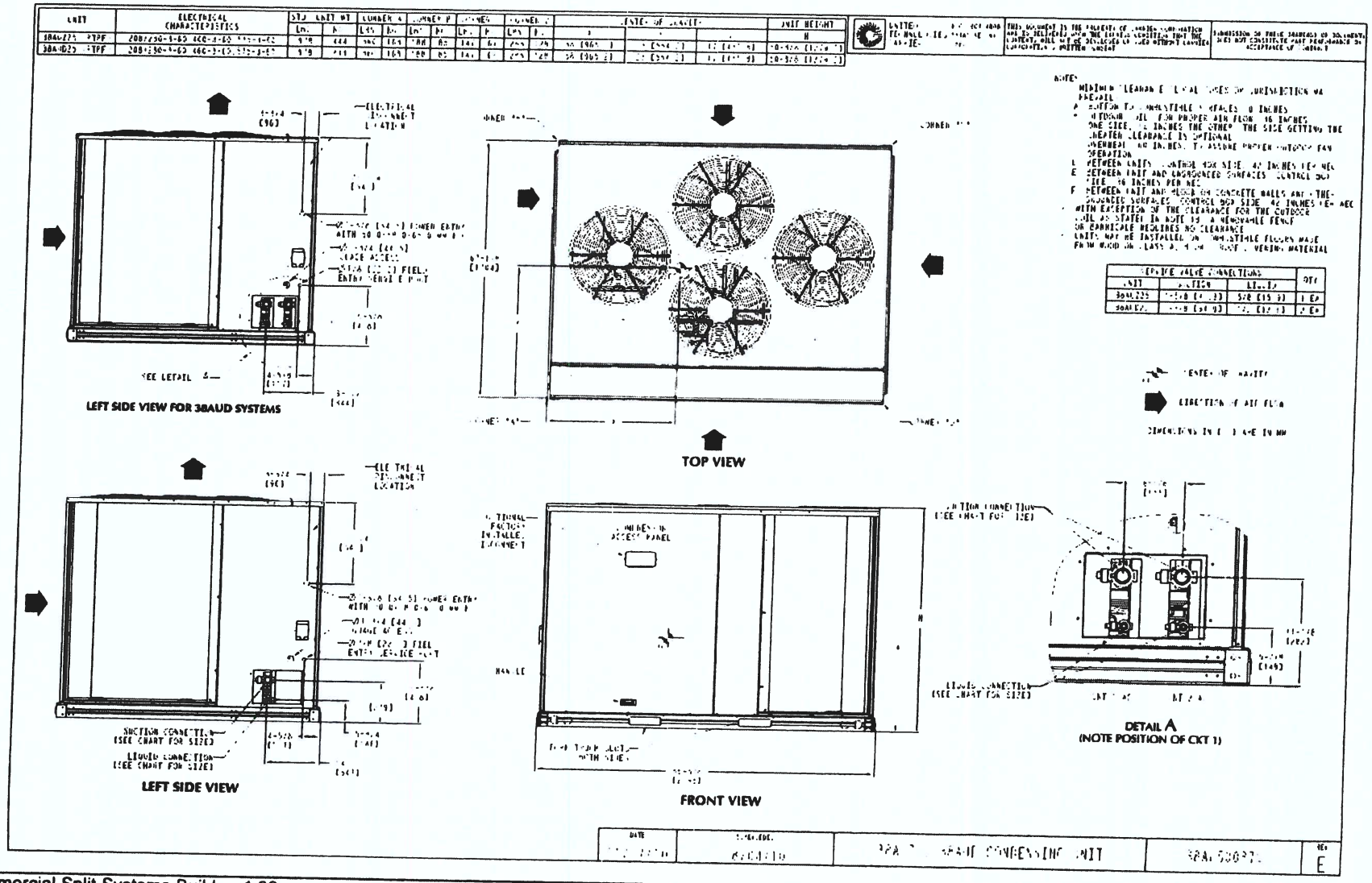

GUIDE SPECIFICATIONS – 38AUDA25A0E5-0A0A0

Commercial Air-Cooled Condensing Units
HVAC Guide Specifications

Size: 25

Part 1: General

SYSTEM DESCRIPTION

1.01. Outdoor-mounted, air-cooled condensing unit suitable for on-the-ground or rooftop installation. Unit shall consist of a hermetic scroll air-conditioning compressor(s) assembly, an air-cooled coil, propeller-type condenser fans, and a control box. Unit shall discharge supply air upward as shown on contract drawings. Unit shall be used in a refrigeration circuit matched with a packaged air-handling unit.

QUALITY ASSURANCE

1.01. Unit shall be rated in accordance with AHRI Standard 360.
1.02 Unit construction shall comply with ANSI/ASHRAE 15 safety code latest revision and comply with NEC.
1.03. Unit shall be constructed in accordance with UL 1995 standard and shall carry the UL and UL, Canada label.
1.04. Unit cabinet shall be capable of withstanding 500-hour salt spray exposure per ASTM B117 (scribed specimen).
1.05. Air-cooled condenser coils for hermetic scroll compressor units (38AUZ) and 38AUD shall be leak tested at 150 psig, and pressure tested at 650 psig.
1.06. Unit shall be manufactured in a facility registered to ISO 9001:2000 manufacturing quality standard.

DELIVERY, STORAGE, AND HANDLING

1.01. Unit shall be shipped as single package only, and shall be stored and handled according to unit manufacturer's recommendations.

WARRANTY (FOR INCLUSION BY SPECIFYING ENGINEER.)

Part 2: Products

EQUIPMENT

2.01. General:
- A. Factory-assembled, single piece, air-cooled condensing unit. Contained within the unit enclosure shall be all factory wiring, piping, controls, compressor, holding charge, and special features required prior to field start-up.

2.02. Unit Cabinet:
- A. Unit cabinet shall be constructed of galvanized steel, bonderized and coated with a prepainted baked enamel finish.
- B. A heavy-gauge roll-formed perimeter base rail with forklift slots and lifting holes shall be provided to facilitate rigging.

2.03. Condenser Fans:
- A. Condenser fans shall be direct driven, propeller type, discharging air vertically upward.
- B. Fan blades shall be balanced.
- C. Condenser fan discharge openings shall be equipped with PVC-coated steel wire safety guards.
- D. Condenser fan and motor shaft shall be corrosion resistant.

2.04. Compressor:
- A. Compressor shall be of the hermetic scroll type.

B. Compressor shall be mounted on rubber grommets.
C. Compressors shall include overload protection.
D. Compressors shall be equipped with a crankcase heater.
E. Compressor shall be equipped with internal high pressure and high temperature protection.
F. 38AUZ*16 and 25 sizes shall use two scroll compressors manifold together.

2.05. Condenser Coils:
A. Standard Aluminum fin - Copper Tube Coils:
1. Standard evaporator and condenser coils shall have aluminum lanced plate fins mechanically bonded to seamless internally grooved copper tubes with all joints brazed.
2. Evaporator coils shall be leak tested to 150 psig, pressure tested to 450 psig, and qualified to UL 1995 burst test at 1775 psig.
3. Condenser coils shall be leak tested to 150 psig, pressure tested to 650 psig, and qualified to UL 1995 burst test at 1980 psig.
B. Optional Copper-fin evaporator and condenser coils:
1. Shall be constructed of copper fins mechanically bonded to copper tubes and copper tube sheets.
2. Galvanized steel tube sheets shall not be acceptable.
3. A polymer strip shall prevent coil assembly from contacting the sheet metal coil pan to minimize potential for galvanic corrosion between coil and pan.

2.06. Refrigeration Components:
A. Refrigeration circuit components shall include liquid line service valve, suction line service valve, a full charge of compressor oil, and a partial holding charge of refrigerant.

2.07. Controls and Safeties:
A. Minimum control functions shall include:
1. Control wire terminal blocks.
2. Compressor lockout on auto-reset safety until reset from thermostat.
3. Each unit shall utilize the Comfort Alertt Diagnostic Board that provides.
a. System Pressure Trip fault code indication
b. Short Cycling fault code indication
c. Locked Rotor fault code indication
d. Open Circuit fault code indication
e. Reverse Phase 3 fault code indication
f. Welded Contactor fault code indication
g. Low Voltage fault code indication
h. Anti-short cycle protection
i. Phase reversal protection
B. Minimum safety devices which are equipped with automatic reset (after resetting first at thermostat), shall include:
1. High discharge pressure cutout.
2. Low pressure cutout.

2.08. Operating Characteristics:
A. The capacity of the condensing unit shall meet or exceed _____ Btuh at a suction temperature of _____F. The power consumption at full load shall not exceed _____ kW.
B. The combination of the condensing unit and the evaporator or fan coil unit shall have a total net cooling capacity of _____ Btuh or greater at conditions of _____ cfm entering-air temperature at the evaporator at _____F wet bulb and _____F dry bulb, and air entering the condensing unit at _____F.
C. The system shall have an EER of _____ Btuh/Watt or greater at standard AHRI conditions.
D. Standard unit shall be capable to operate up to 125_F (52_C) and down to 40_F (4_C)

2.09. Electrical Requirements:
A. Nominal unit electrical characteristics shall be _____ v, 3-ph, 60 Hz. The unit shall be capable of satisfactory operation

within voltage limits of ____ v to _____ v.

B. Unit electrical power shall be single-point connection.

C. Unit control circuit shall contain a 24-v transformer for unit control.

2.10. Special Features:

A. Thermostat Controls:

1. Programmable multi-stage thermostat shall have 7-day clock, holiday scheduling, large backlit display, remote sensor capability, and Title 24 compliance.

2. Commercial Electronic Thermostat shall have 7-day time clock, auto-changeover, multi-stage capability, and large LCD (liquid crystal display) temperature display.

COMMERCIAL SPLIT SYSTEMS
38AUZ 6 to 20 Ton
38AUD 10 to 20 Ton
AIR-COOLED COOLING ONLY CONDENSING UNITS with PURON® REFRIGERANT

These light commercial air-cooled cooling only condensing units are easily connected by refrigerant lines and low voltage control wiring to matching Carrier packaged air-handling units or other suitable evaporator units. They are ideal for new construction or renovation applications where quality and performance are required.

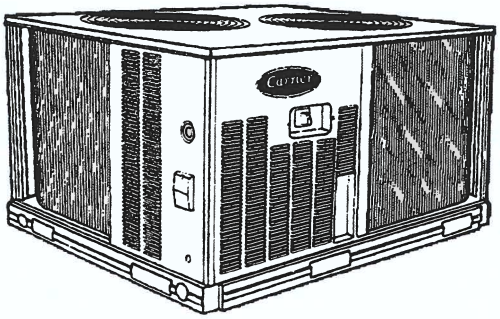

ASHRAE COMPLIANT

c UL us

AHRI CERTIFIED

Puron

Manufactured in facility registered to ISO 9001:2008 quality standard

BASE UNIT STANDARD FEATURES:

- Puron® (R-410A) HFC refrigerant partial charge
- Single circuit units (38AUZ) are available in 1 or 2 stage cooling
- Two circuit units (38AUD) are available in 2 stage cooling
- All models utilize round tube plate fin coils.
- Standard one year parts warranty and five year compressor parts warranty. Extended 2-5 year parts and 1-5 labor coverage are available.
- Cooling operating range up to 125°F (52°C) and down to 35°F (2°C) as standard.
- Available Motormaster® I control for cooling operation down to -20°F (-29°C)
- Fully hermetic scroll compressor with crankcase heater
- New terminal board facilitating simple safety circuit troubleshooting and simplified control box arrangement. 24-volt 75va control system
- High and low pressure switches.

- Comfort Alert™ Diagnostic Board:
  - LED Go-No-Go and fault code
  - Built in time guard anti-short cycle
  - Phase protection
  - Fault code retention logic
  - Low voltage compressor contactor protector
- UL and UL, Canada apply to standard units; 575-volt units UL, Canada only.
- Full perimeter base rails with built-in rigging adapters and fork truck slots
- Pre-painted exterior panels and primer-coated interior panels tested to 500 hours salt spray protection
- Direct drive permanently lubricated condenser fan motors
- All units factory run tested
- Compressors mounted on independent vibration isolators

HSS BUILDING 50T 112221

Submittal Cover Sheet
Unit Report
Performance Summary Report
Acoustic Summary
Certified Drawings
Guide Specifications
Feature Sheet

Unit Report For HSS BUILDING 50T 112221

Project. HA-1702-21-11 UOG IFB B21-17 PURCHASING HVAC EQUIP
Prepared By BERNARD LLARENAS

02:16PM

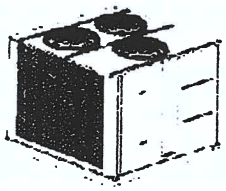

Outdoor Unit Parameters

Unit Quantity	1	
Unit Model	38APD	
Unit Size	50 Tons	
Voltage	208-3-60	V-Ph-Hz
No of Circuits	Two Circuits	

System Parameter

System Quantity	1	
Refrigerant Type	PURON	
Compressor Quantity	2 (Circ A), 2 (Circ B)	
Compressor Type	Scroll	
Std Capacity Steps	23, 50, 73, 100	
Std Min Outdoor Temp(Cooling)	25.0	°F
No of Outdoor fans	3	

Outdoor Unit Dimensions and Weight

Unit Length	7' 8.1"	
Unit Width	7' 4.2"	
Unit Height	6' 1.0"	
Unit Operating Weight	2120	lb

Warranty Information Outdoor (Note: for US & Canada only)

First Year - Parts Only (Standard)

NOTE: Please see Warranty Catalog 808-218 for explanation of policies and ordering methods.

Ordering Information

Part Number	Description	Quantity
Base Unit - Outdoor		
38APD05056-3009J		
	Base Unit	1
	Standard Line Length, RTPF	
	Single Point Power, Terminal Block	1
	Export packaging, (Skid + Bag)	1
	Scrolling Marquee, EMM, BACnet Communication	1
	Copper E-Coat Fin / Copper Tube	1
Accessories		1
33CS2PP2S-03	Thermostat for Outdoor Unit	
30GT-911---062	Navigator for Outdoor Unit	1
		1

Performance Summary For HSS BUILDING 50T 112221

Project: HA-1702-21-11 UOG IFB B21-17 PURCHASING HVAC EQUIP
Prepared By. BERNARD LLARENAS

02:16PM

System:

No. of Stages	**38APD050**	
System Quantity	**Dual Stage**	
Altitude	**1**	
EER @ ARI Conditions	**600.0**	ft
EER @ Ambient Conditions	**11.1**	
IPLV:	**10.2**	
Capacity Split Percentage (A ckt/B ckt)	**14.9**	
Suction Line Loss:	**48/52**	%
Condensing unit is rated in accordance with ARI 365	**2.0**	°F

Typical Liquid and Suction Line Sizing

Pipe Length	Liquid Line Size	Suction Line Size
0 - 25	5/8 (A), 5/8 (B)	1 3/8 (A), 1 3/8 (B)
26 - 50	5/8 (A), 7/8 (B)	1 5/8 (A), 1 5/8 (B)
51 - 75	7/8 (A), 7/8 (B)	1 5/8 (A), 1 5/8 (B)
76 - 100	7/8 (A), 7/8 (B)	1 5/8 (A), 2 1/8 (B)
101 - 125	7/8 (A), 7/8 (B)	2 1/8 (A), 2 1/8 (B)
126 - 150	7/8 (A), 7/8 (B)	2 1/8 (A), 2 1/8 (B)
151 - 175	7/8 (A), 7/8 (B)	2 1/8 (A), 2 1/8 (B)
176 - 200	7/8 (A), 7/8 (B)	2 1/8 (A), 2 1/8 (B)

Do NOT exceed 200 ft max linear separation or 75 ft vertical liquid lift. Oil management is critical on split systems for compressor reliability. Refrigerant circuit warranty may be void beyond these limits.

Liquid Line Sizing

Pipe Length	Liquid Line Size
0 - 25	5/8 (A), 5/8 (B)
26 - 50	5/8 (A), 7/8 (B)
51 - 75	7/8 (A), 7/8 (B)
76 - 100	7/8 (A), 7/8 (B)
101 - 125	7/8 (A), 7/8 (B)
126 - 150	7/8 (A), 7/8 (B)
151 - 175	7/8 (A), 7/8 (B)
176 - 200	7/8 (A), 7/8 (B)

Suction Line Sizing

Pipe Length	Suction Line Size
0 - 25	1 3/8 (A), 1 3/8 (B)
26 - 50	1 5/8 (A), 1 5/8 (B)
51 - 75	1 5/8 (A), 1 5/8 (B)
76 - 100	1 5/8 (A), 2 1/8 (B)
101 - 125	2 1/8 (A), 2 1/8 (B)
126 - 150	2 1/8 (A), 2 1/8 (B)
151 - 175	2 1/8 (A), 2 1/8 (B)
176 - 200	2 1/8 (A), 2 1/8 (B)

Dual suction riser may be required, refer to PD.

Outdoor Unit Parameters

Unit Quantity:	**1**	
PartNumber:	**38APD05056-3009J**	
Unit Model	**38APD**	
Unit Size:	**50 Tons**	
Voltage:	**208-3-60**	V-Ph-Hz
Total Clg Cap (Gross):	**576.8**	MBH

Performance Summary For HSS BUILDING 50T 112221

Project. HA-1702-21-11 UOG IFB B21-17 PURCHASING HVAC EQUIP
Prepared By: BERNARD LLARENAS

02.16PM

SDT:		
SDT2:	127.9	°F
SCT	131.2	°F
SCT2	127.8	°F
Clg Ent Air DB	131.1	°F
Saturated Suction Temp.	95.0	°F
	45.0	°F

38AP units are not designed for Refrigeration Duty. Unit operational range should be reviewed to ensure that operation at full and part load conditions with Saturated Suction Temperatures at or below 30 F are avoided. Operation below 30 F SST may result in ice build-up on evaporator coil resulting in liquid flood-back and possible compressor failure. Return/Mixed Air Temperature should not be below 55F. If the customer requires differently, please contact application engineering.

Outdoor Electrical Data

Unit Voltage	208-3-60	V-Ph-Hz
Unit MCA:	231.4	Amps
Unit MOCP	250.0	Amps
Compressor Power	52.30	kW
Voltage Range Min.	187	V
Voltage Range Max	254	V
Compressor RLA	48.1/51.3	
Compressor LRA	245/300	
Compressor Quantity	2 (Circ A), 2 (Circ B)	
Fan Motors Qty.	3	
Fan Motor FLA:	NA	Amps
Notice. Outdoor unit elect. data is based on 208-3-60		

FIOPS and Accessories Information

FIOPS	Quantity
Standard Line Length, RTPF	1
Export packaging, (Skid + Bag)	1
Scrolling Marquee, EMM, BACnet Communication	1
Accessories	**Quantity**
Thermostat for Outdoor Unit	1
Navigator for Outdoor Unit	1

Liquid line check valve(s) prevent charge migration to compressor. These valves may be required for certain applications, refer to PD.

Acoustic Information

A-Wgt Outdoor Sound Power Level **96.7** dbA

Acoustic Notes:

1. The acoustic center of the unit is located at the geometric center of the unit.
2. All estimated sound power levels dB re 1 Pico watt should not be guaranteed or certified as being the actual sound power levels

Advanced Acoustics Parameters

1. Unit height above ground: **1.0** ft
2. Horizontal distance from unit to receiver: **20.0** ft
3. Receiver height above ground: **5.7** ft
4. Height of obstruction: **0.0** ft
5. Horizontal dist. from obstruction to receiver: **0.0** ft
6. Horizontal dist. from unit to obstruction: **0.0** ft

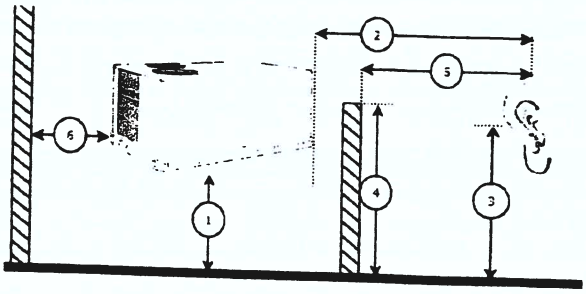

Detailed Acoustics Information

Octave Band Center Frequency, Hz	31	63	125	250	500	1k	2k	4k	8k	Overa
Sound Power Levels at Unit's Acoustic Center (Lw), dB	78	98	95	94	95	92	88	85	82	103
A-Wgted Sound Power Levels at Unit's Acoustic Center (LwA), dBA	39	72	79	86	91	92	90	86	81	97
Sound Press. Levels at Dist. Specified above (Lp), dB	53	73	70	69	69	66	63	60	57	78
A-Wgted Sound Press. Levels at Dist. Specified above (LpA), dBA	14	47	54	61	66	66	64	61	56	72

Calculation methods used in this program are patterned after the ASHRAE Guide, other ASHRAE Publications and the AHRI Acoustical Standards. While a very significant effort has been made to insure the technical accuracy of this program, it is assumed that the user is knowledgeable in the art of system sound estimation and is aware of the tolerances involved in real world acoustical estimation. This program makes certain assumptions as to the dominant sound sources and sound paths which may not always be appropriate to the real system being estimated. Because of this, no assurances can be offered that this software will always generate an accurate sound prediction from user supplied input data. If in doubt about the estimation of expected sound levels in a space, an Acoustical Engineer or a person with sound prediction expertise should be consulted.

Acoustic Summary For HSS BUILDING 50T 112221

Project: HA-1702-21-11 UOG IFB B21-17 PURCHASING HVAC EQUIP
Prepared By: BERNARD LLARENAS

02.16PM

Outdoor Unit Parameters:

Tag Name.....**HSS BUILDING 50T 112221**
Unit Model.....**38APD**
Unit Size.....**50 Tons**
System Type.....**Dx Cooling Only**
Refrigerant Type.....**PURON**
Compressor Quantity.....**2 (Circ A), 2 (Circ B)**
Compressor Type.....**Scroll**

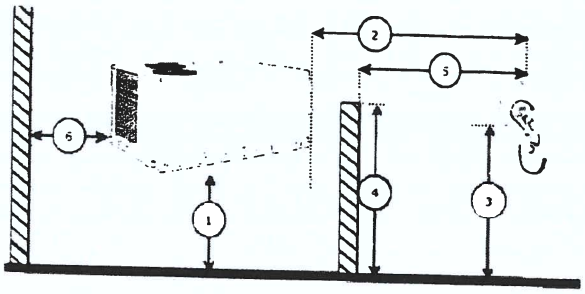

Advanced Accoustics Parameters

1. Unit height above ground .....**1.0** ft
2. Horizontal distance from unit to receiver **20.0** ft
3. Receiver height above ground .....**5.7** ft
4. Height of obstruction.....**0.0** ft
5. Horizontal distance from obstruction to receiver **0.0** ft
6. Horizontal distance from unit to obstruction **0.0** ft

Detailed Acoustics Information

Octave Band Center Frequency, Hz	31	63	125	250	500	1k	2k	4k	8k	Overa
Sound Power Levels at Unit's Acoustic Center (Lw) dB	78	98	95	94	95	92	88	85	82	103
A-Wgted Sound Power Levels at Unit's Acoustic Center (LwA) dBA	39	72	79	86	91	92	90	86	81	97
Sound Press. Levels at Dist Specified above (Lp) dB	53	73	70	69	69	66	63	60	57	78
A-Wgted Sound Press Levels at Dist Specified above (LpA) dBA	14	47	54	61	66	66	64	61	56	72

Calculation methods used in this program are patterned after the ASHRAE Guide, other ASHRAE Publications and the AHRI Acoustical Standards While a very significant effort has been made to insure the technical accuracy of this program, it is assumed that the user is knowledgeable in the art of system sound estimation and is aware of the tolerances involved in real world acoustical estimation This program makes certain assumptions as to the dominant sound sources and sound paths which may not always be appropriate to the real system being estimated. Because of this, no assurances can be offered that this software will always generate an accurate sound prediction from user supplied input data If in doubt about the estimation of expected sound levels in a space, an Acoustical Engineer or a person with sound prediction expertise should be consulted

Acoustic Note:

1. Estimated Sound Power levels - dB re: 1 picowatt
2. Estimated Sound Pressure levels - dB re: 20 micropascal
3. Estimated sound levels given above are assumed to originate at the acoustic center of the unit The acoustic center of the unit is located at the projection of the condensing unit's geometric center of its base

4. Sound power levels shown above were determined in accordance with ARI standard 370 for large outdoor refrigeration and air conditioning equipment.

5. Calculation methods used in this program are patterned after the ASHRAE Guide; other ASHRAE Publications and the ARI Acoustical Standards While a very significant effort has been made to insure the technical accuracy of this program, it is assumed that the user is knowledgeable in the art of system sound estimation and is aware of the tolerances involved in real world acoustical estimation This program makes certain assumptions as to the dominant sound sources and sound paths which may not always be appropriate to the real system being estimated. Because of this, no assurances can be offered that this software will always generate an accurate sound prediction from user supplied input data. If in doubt about the estimation of expected sound levels in a space, an Acoustical Engineer or a person with sound prediction expertise should be consulted

Certified Drawing for HSS BUILDING 50T 112221

Project: HA-1702-21-11 UOG IFB B21-17 PURCHASING HVAC EQUIP
Prepared By: BERNARD LLARENAS

12/01/2021
02:16PM

NOTES:
1. BE SURE TO USE A WET RAG AND REMOVE ALL VALVE CORES BEFORE BRAZING FIELD PIPING
2. DO NOT CAP OR OTHERWISE OBSTRUCT THE LIQUID LINE TEMPERATURE RELIEF
3. Ø7/8 (22.4) PILOT HOLE PROVIDED FOR LOCATING FIELD POWER WIRING ACTUAL HOLE REQUIRED DEPENDS ON FIELD WIRE SIZING
4. Ø0.437 (11 10) HOLE USED FOR MOUNTING UNIT
5. UNIT MUST HAVE CLEARANCES AS FOLLOWS:
   TOP - DO NOT RESTRICT.
   COIL END - 42 (1067) FROM SOLID SURFACE.
   PANEL SIDE - 48 (1219) PER NEC.
6. SEE TABLE COLUMN H: DIMENSION FOR STANDARD AND LOW SOUND WITH STACK FAN OPTION.
7. CARRIER DOES NOT RECOMMEND INSTALLATION IN A PIT
8. UNIT CAN BE HANDLED USING THE FORK TRUCK LIFT POCKETS.
9. DIMENSIONS SHOWN IN INCHES(MM)
10. SIZES 040 AND 050 UNITS HAVE 3 CONDENSER FANS.SIZE 060 UNITS HAVE 4 CONENDER FANS
11. WEIGHT DOES NOT INCLUDE REFRIGERANT CHANGE
12. FOR 38APS PIPING,REFER TO 'CIRCUIT A LIQUID CONNECTION' AND 'CIRCUIT A SUCTION CONNECTION' DIMENIONS SHOWN

UNITED TECHNOLOGIES CARRIER — P O BOX 4808 SYRACUSE NY 13221

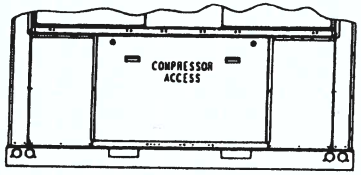

FRONT VIEW (SINGLE CIRCUIT)

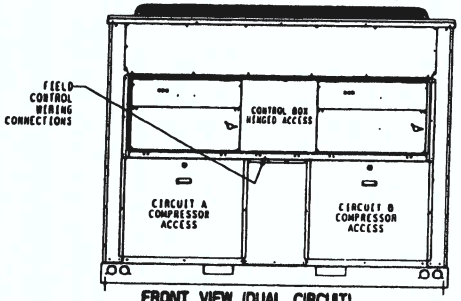

FRONT VIEW (DUAL CIRCUIT)

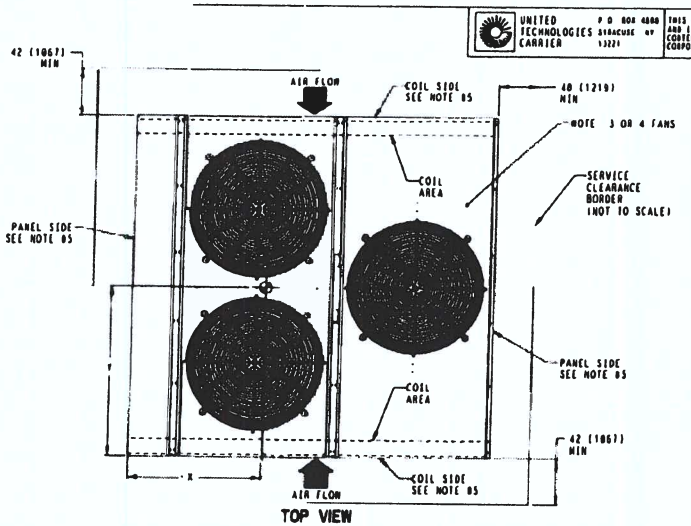

TOP VIEW

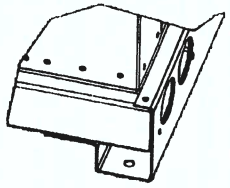

DETAIL A

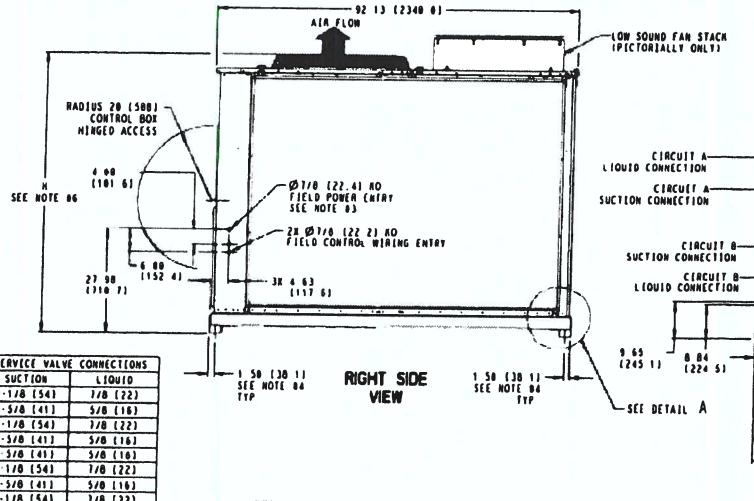

RIGHT SIDE VIEW

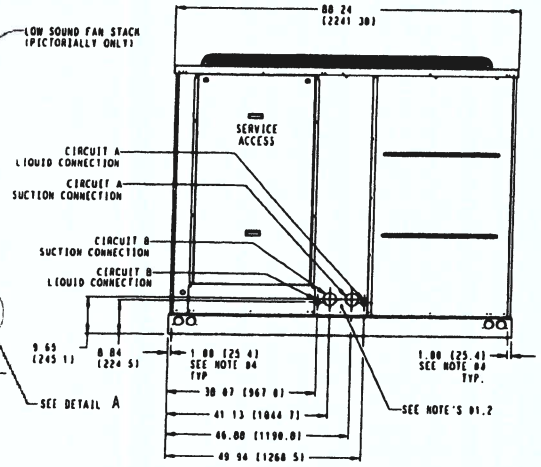

REAR VIEW

	UNIT	STD. UNIT WT. LBS.	STD. UNIT WT. KG.	CENTER OF GRAVITY X	CENTER OF GRAVITY Y	UNIT HEIGHT H	SERVICE VALVE CONNECTIONS SUCTION	SERVICE VALVE CONNECTIONS LIQUID
STANDARD	38APS040	1960	893	35.0 (889)	44.0 (1118)	73 0 (1854)	2-1/8 (54)	7/8 (22)
	38APD040	2094	950	33.7 (856)	44.1 (1120)		1-5/8 (41)	5/8 (16)
	38APS050	1977	897	34.9 (886)	44.0 (1118)		2-1/8 (54)	7/8 (22)
	38APD050	2120	961	33.4 (848)	44.1 (1120)		1-5/8 (41)	5/8 (16)
	38APD060	2227	1010	34.4 (874)	44.1 (1120)		1-5/8 (41)	5/8 (16)
LOW SOUND	38APS040	2022	917	35.0 (889)	44.0 (1118)	78 5 (1994)	2-1/8 (54)	7/8 (22)
	38APD040	2140	974	33.7 (856)	44.1 (1120)		1-5/8 (41)	5/8 (16)
	38APS050	2031	921	34 9 (886)	44 0 (1118)		2-1/8 (54)	7/8 (22)
	38APD050	2174	986	33 4 (848)	44 1 (1120)		1-5/8 (41)	5/8 (16)
	38APD060	2299	1043	34 4 (874)	44 1 (1120)		1-5/8 (41)	5/8 (16)

DATE	SUPERCEDES			REV
04/09/12	F	38AP040-060 UNIT ASSY	38AP555556	G

OPA-PA-22-002-266

GUIDE SPECIFICATIONS – 38APD05056-3009J

HVAC Guide Specifications
Commercial Air-Cooled Condensing Units with Puron® Refrigerant (R-410A)

Size: 050

Part 1: General

SYSTEM DESCRIPTION

1.01. Outdoor-mounted, air-cooled condensing unit with Puron® refrigerant (R-410A) suitable for on-the-ground or rooftop installation. The 38APD unit shall have two independent refrigeration circuits and shall consist of two, four, five or six rotary scroll compressors. Unit shall have air-cooled coils, propeller-type condenser fans, a control box, and shall discharge condenser air vertically upward as shown on certified drawings. Unit shall be used in refrigeration circuit with a central station air-handling unit or direct-expansion coils.

QUALITY ASSURANCE

1.01 Unit performance shall be rated in accordance with AHRI (Air-Conditioning, Heating, and Refrigeration Institute) Standard 365, latest edition (U.S.A).

1.02. Unit construction shall comply with latest edition of ASHRAE (American Society of Heating, Refrigerating, and Air-Conditioning Engineers) 15 Safety Code, UL 1995, and ASME (American Society of Mechanical Engineers) applicable codes (U.S.A. codes).

1.03 The management system governing the manufacturer of the product is ISO (International Organization for Standardization) 9001: 2015 certified.

1.04. Base unit shall be constructed in accordance with UL (Underwriters Laboratories) standards and CSA (Canadian Standards Association)..

1.05. Painted parts shall withstand 1000 hours in constant neutral salt spray under ASTM B117 conditions with a 1mm scribe per ASTM D1654. After test, painted parts shall show no signs of wrinkling or cracking, no loss of adhesion, no evidence of blistering, and the mean creepage shall not exceed 1/4 in. (Rating = 4 per ASTM D1654) on either side of the scribe line.

1.06 Design pressure shall be 650 psig (4482 kPa).

1.07. Unit shall be functional checked at the factory.

1.08. Lifting holes shall be provided to facilitate rigging.

DELIVERY, STORAGE, AND HANDLING

1.01. Unit shall be shipped as single package and shall be stored and handled per unit manufacturer's recommendations.

WARRANTY (FOR INCLUSION BY SPECIFYING ENGINEER)

Part 2: Products

EQUIPMENT

2.01. General:

A. Factory assembled, single-piece, air-cooled condensing unit. Contained within the unit enclosure shall be all factory wiring, piping, controls, compressors, nitrogen holding charge, and special features required prior to field start-up.

2.02. Unit Cabinet:

A. Cabinet shall be galvanized steel casing with a baked enamel powder or pre-painted finish.

B. Control box access panels shall be hinged for service access.

2.03. Fans:

A. Condenser fans shall be direct-drive propeller type, discharging air vertically upward.

B. All condenser fan motors shall be totally enclosed 3-phase type with permanently lubricated ball bearings, class F insulation and internal, automatic-reset thermal overload protection or manual reset calibrated circuit breakers.

C. Shafts shall have inherent corrosion resistance.

D. Fan blades shall be statically and dynamically balanced.

E. Condenser-fan openings shall be equipped with PVC-coated steel wire safety guards.

2.04. Compressors:

A. Compressors shall be rotary scroll.

B. Operating oil charge and a crankcase heater control oil dilution.

C. Compressors shall be mounted on two rails having rubber in shear vibration isolators

D. Staging of compressors shall provide unloading capability.

E. Compressor motors shall be cooled by refrigerant gas passing through motor windings and shall have either internal line break thermal and current overload protection or external current overload modules with compressor temperature sensors.

2.05. Condenser Coils:

A. Coil shall be air-cooled microchannel heat exchanger (MCHX) and shall have a series of flat tubes containing a series of multiple, parallel flow microchannels layered between the refrigerant manifolds. Microchannel coils shall consist of a two-pass arrangement. Coil construction shall consist of aluminum alloys for the fins, tubes and manifolds in combination with a corrosion-resistant coating on the tubes.

B. Tubes shall be cleaned, dehydrated, and sealed.

C. Assembled condenser coils shall be leak tested and pressure tested at 650 psig (4482 kPa).

2.06 Refrigeration Components:

A. Refrigeration circuit components shall include liquid line temperature relief device, pressure transducers, liquid line shutoff valve, suction shutoff valve, suction line accumulators, nitrogen holding charge, and compressor oil.

B. Standard line length (0-100 ft)

C. Long line length check valves are required for liquid line installation on all linear line length applications of more than 100 ft (30.5 m) to prevent liquid migration during unit shutdown. For any 025-030 size dual circuit unit application where evaporator is located higher than the condensing unit, check valves are required for linear line length above 55 ft (16.8 m)

D. Units shall include one factory-installed suction line accumulator for each refrigerant circuit.

2.07. Controls and Safeties:

A. Unit ComfortLink controls shall include:

1. Scrolling marquee display module shall be used for accessing condensing unit information, reading sensor values, and testing the condensing unit. The scrolling marquee display is a 4-key, 4-character, 16-segment LED (light-emitting diode) display. Eleven mode LEDs shall be located on the display as well as an Alarm Status LED. The display shows all of the ComfortLink control codes (with 60-character expandable clear language), plus set points, time of day, temperatures, pressures, and superheat. Additional information can be displayed all at once with the accessory Navigator™ display.
2. Carrier Comfort Network® (CCN) system capability.
3. Unit control with standard pressure transducer, discharge pressure transducer and suction temperature thermistors.
4. Current alarm list and alarm history list on display.
5. Automatic compressor lead/lag control.
6. Service run test capability.
7. Compressor minimum run time (3 minutes) and minimum off time (3 minutes).
8. Service diagnostic mode.
9. Self-contained low voltage control circuit.
10. Cycle condenser fans to maintain proper head pressure control.
11. Capacity control with staging compressors.

12. Alarm relay output to indicate when unit is in alarm condition.

B. Minimum unit safety devices shall include:

1. Solid-state compressor lockout to provide optional reset capability at the space thermostat if any of the following safety devices trip and shut off compressor.
   a. Compressor lockout protection for internal or external overload.
   b. Low pressure protection.
   c. High pressure protection (high pressure switch or internal).
   d. Compressor reverse rotation protection.
   e. Loss of charge protection.
   f. Low suction superheat protection.
   g. Short cycle protection.
   h. Suction and discharge pressure transducers.
   i. Circuit breakers or fuses for short circuit protection of compressors.

2.08. Operating Characteristics:

A. The capacity of the condensing unit shall meet or exceed ____ Btuh (____ kW) at a suction temperature of ____ F (____ C). The power consumption at full load shall not exceed ____ Btuh (____ kW).

B. The combination of the condensing unit and the evaporator or air handling unit shall have a total net cooling capacity of ____ Btuh (____ kW) or greater at conditions of ____ cfm (____ L/s) entering-air temperature at the evaporator at ____ F (____ C) wet bulb and ____ F (____ C) dry bulb, and air entering the condensing unit at ____ F (____ C).

C. The system shall have an Energy Efficiency Ratio (EER) of ____ Btuh/watt or greater at standard AHRI conditions.

2.09. Electrical Requirements:

A. All unit power wiring shall enter unit cabinet at a single location. Unit shall be provided with a XL starter and a terminal block.

2.10. Special Features:

A. Optional E-coated copper-fin coils:

1. Coil shall have a flexible epoxy polymer coating uniformly applied to all coil surface areas without material bridging between fins. Coating process shall ensure complete coil encapsulation. Color shall be high gloss black with gloss; 60° of 65 to 90% per ASTM D523-89. Uniform dry film thickness from 0.8 to 1.2 mil on all surface areas including fin edges. Superior hardness characteristics of 2H per ASTM D3363-92A and cross hatch adhesion of 4B-5B per ASTM D3359-93. Impact resistance shall be up to 160 in./lb (ASTM D2794-93). Humidity and water immersion resistance shall be up to minimum 1000 and 250 hours respectively (ASTM D2247-92 and ASTM D870-92). Corrosion durability shall be confirmed through testing to no less than 3000 hours salt spray per ASTM B117-90. Coil construction shall be copper-fins mechanically bonded to copper tube sheets. Galvanized steel tube sheets shall not be acceptable. A polymer strip shall prevent coil assembly from contacting sheet metal coil pan to maintain coating integrity and minimize corrosion potential between the coil and pan.

B. Navigator™ Hand Held Display:

1. Portable hand held display module with a minimum of 4 lines and 20 characters per line, of clear English, French, Spanish, or Portuguese language.
2. Display menus shall provide clear language descriptions of all menu items, operating modes, configuration points and alarm diagnostics. Reference to factory codes shall not be accepted.
3. RJ-14 connection plug shall allow display module to be connected to factory-installed receptacle.
4. Industrial grade coiled extension cord shall allow the display module to be moved around the unit.
5. Magnets shall hold the display module to any sheet metal panel to allow hands-free operation.
6. Display module shall have NEMA (National Electrical Manufacturers Association, U.S.A.) 4x housing suitable for use in outdoor environments.
7. Display shall have back light and contrast adjustment for easy viewing in bright sunlight or night conditions.
8. Navigator module shall have raised surface buttons with positive tactile response.
9. Navigator module shall be available as field-installed accessory for all units.

C. BACnet Communication Option:
   1. The BACnet Communication option shall provide factory-installed communication capability with a BACnet MS/TP network. Allows integration with i-Vu® Open control system or a BACnet building automation system.

D. Energy Management Module (EMM):
   1. The EMM shall provide remote set point, demand limit control, and percent capacity input. The EMM is not needed with use of BACnet or LON accessory kit.

38AP GEMINISELECT AIR COOLED CONDENSING UNITS

These condensing units feature two independent refrigerant circuits, each circuit having its own highly efficient scroll compressors. All units are factory wired, nitrogen charged, and easily connected by refrigerant lines and control wiring to the matching Carrier air-handling unit (40RU or 39 Series). Various combinations of these extremely flexible condensing units matched with air handlers provide customized packages to cover a wide range of cooling requirements. Low roof-load weight distribution and weatherproof construction make these units excellent selections for rooftop or on-the-ground installations. These 38AP condensing units are well suited for commercial or industrial air conditioning applications.

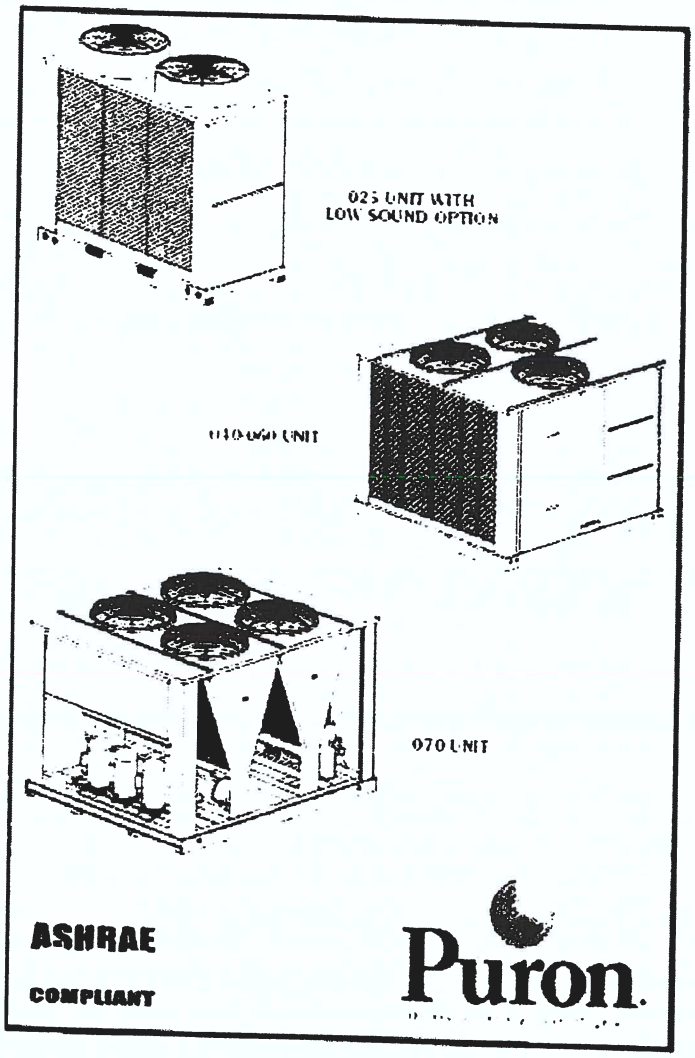

Gemini Select

These dependable split systems match Carrier's 40RU or 39 Series indoor-air handlers with the versatile outdoor 38AP condensing units for a wide selection of commercial cooling solutions

- Split condensing units compatible with ASHRAE 90.1
- Chlorine-free, non-ozone depleting Puron refrigerant (R-410A)
- Condenser coils feature the Novation® heat exchanger with microchannel coil technology
- 38APS single-circuit unit has up to 3 rotary scroll compressors
- 38APD unit has up to 6 rotary scroll compressors with 2 independent circuits
- Standard scroll compressor units operate as low as 33% (single circuit) or 15% (dual circuit) of nominal capacity
- Optional digital scroll compressors allow incremental unloading down to 10% (single circuit) or 5% (dual circuit) of nominal capacity for VAV applications
- Protection against high discharge and low suction refrigerant pressure, and low oil pressure

HSS BUILDING 30T 112221

Submittal Cover Sheet
Unit Report
Performance Summary Report
Acoustic Summary
Certified Drawings
Guide Specifications
Feature Sheet

Unit Report For HSS BUILDING 30T 112221

Project. HA-1702-21-11 UOG IFB B21-17 PURCHASING HVAC EQUIP
Prepared By: BERNARD LLARENAS

02:16PM

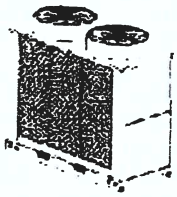

Outdoor Unit Parameters

Unit Quantity	1	
Unit Model	38APD	
Unit Size	30 Tons	
Voltage	208-3-60	V-Ph-Hz
No of Circuits	Two Circuits	

System Parameter

System Quantity	1	
Refrigerant Type:	PURON	
Compressor Quantity	1 (Circ A), 1 (Circ B)	
Compressor Type	Scroll	
Std Capacity Steps	50, 100	
Std. Min. Outdoor Temp(Cooling).	32.0	°F
No of Outdoor fans:	2	

Outdoor Unit Dimensions and Weight

Unit Length:	7' 4.2"	
Unit Width:	3' 4.3"	
Unit Height	6' 1.1"	
Unit Operating Weight	1264	lb

Warranty Information Outdoor (Note: for US & Canada only)

First Year - Parts Only (Standard)

NOTE: Please see Warranty Catalog 808-218 for explanation of policies and ordering methods.

Ordering Information

Part Number	Description	Quantity
Base Unit - Outdoor		
38APD03056-3009J		
	Base Unit	1
	Standard Line Length, RTPF	
	Single Point Power, Terminal Block	1
	Export packaging, (Skid + Bag)	1
	Scrolling Marquee, EMM, BACnet Communication	1
	Copper E-Coat Fin / Copper Tube	1
Accessories		1
33CS2PP2S-03	Thermostat for Outdoor Unit	
30GT-911---062	Navigator for Outdoor Unit	1
		1

Performance Summary For HSS BUILDING 30T 112221

Project: HA-1702-21-11 UOG IFB B21-17 PURCHASING HVAC EQUIP
Prepared By: BERNARD LLARENAS

02 16PM

System:

No. of Stages	38APD030	
System Quantity	Dual Stage	
Altitude	1	
EER @ ARI Conditions	600.0	ft
EER @ Ambient Conditions	10.8	
IPLV	10.0	
Capacity Split Percentage (A ckt/B ckt)	12.8	
Suction Line Loss	50/50	%
Condensing unit is rated in accordance with ARI 365	2.0	°F

Typical Liquid and Suction Line Sizing

Pipe Length	Liquid Line Size	Suction Line Size
0 - 25	5/8 (A), 5/8 (B)	1 1/8 (A), 1 1/8 (B)
26 - 50	5/8 (A), 5/8 (B)	1 3/8 (A), 1 3/8 (B)
51 - 75	5/8 (A), 5/8 (B)	1 3/8 (A), 1 3/8 (B)
76 - 100	5/8 (A), 5/8 (B)	1 3/8 (A), 1 3/8 (B)
101 - 125	5/8 (A), 5/8 (B)	1 5/8 (A), 1 5/8 (B)
126 - 150	5/8 (A), 5/8 (B)	1 5/8 (A), 1 5/8 (B)
151 - 175	7/8 (A), 7/8 (B)	1 5/8 (A), 1 5/8 (B)
176 - 200	7/8 (A), 7/8 (B)	1 5/8 (A), 1 5/8 (B)

Do NOT exceed 200 ft max linear separation or 75 ft vertical liquid lift. Oil management is critical on split systems for compressor reliability. Refrigerant circuit warranty may be void beyond these limits

Liquid Line Sizing

Pipe Length	Liquid Line Size
0 - 25	5/8 (A), 5/8 (B)
26 - 50	5/8 (A), 5/8 (B)
51 - 75	5/8 (A), 5/8 (B)
76 - 100	5/8 (A), 5/8 (B)
101 - 125	5/8 (A), 5/8 (B)
126 - 150	5/8 (A), 5/8 (B)
151 - 175	7/8 (A), 7/8 (B)
176 - 200	7/8 (A), 7/8 (B)

Suction Line Sizing

Pipe Length	Suction Line Size
0 - 25	1 1/8 (A), 1 1/8 (B)
26 - 50	1 3/8 (A), 1 3/8 (B)
51 - 75	1 3/8 (A), 1 3/8 (B)
76 - 100	1 3/8 (A), 1 3/8 (B)
101 - 125	1 5/8 (A), 1 5/8 (B)
126 - 150	1 5/8 (A), 1 5/8 (B)
151 - 175	1 5/8 (A), 1 5/8 (B)
176 - 200	1 5/8 (A), 1 5/8 (B)

Dual suction riser may be required, refer to PD.

Outdoor Unit Parameters

Unit Quantity:	1	
PartNumber:	38APD03056-3009J	
Unit Model:	38APD	
Unit Size:	30 Tons	
Voltage:	208-3-60	V-Ph-Hz
Total Clg Cap (Gross)	361.7	MBH

Performance Summary For HSS BUILDING 30T 112221

Project: HA-1702-21-11 UOG IFB B21-17 PURCHASING HVAC EQUIP
Prepared By: BERNARD LLARENAS

02:16PM

SDT:		
SDT2	129.2	°F
SCT	129.2	°F
SCT2	129.1	°F
Clg Ent Air DB	129.1	°F
Saturated Suction Temp	95.0	°F
	45.0	°F

38AP units are not designed for Refrigeration Duty. Unit operational range should be reviewed to ensure that operation at full and part load conditions with Saturated Suction Temperatures at or below 30 F are avoided. Operation below 30 F SST may result in ice build-up on evaporator coil resulting in liquid flood-back and possible compressor failure. Return/Mixed Air Temperature should not be below 55F. If the customer requires differently, please contact application engineering.

Outdoor Electrical Data

Unit Voltage	208-3-60	V-Ph-Hz
Unit MCA	138.8	Amps
Unit MOCP	175.0	Amps
Compressor Power	32.50	kW
Voltage Range Min	187	V
Voltage Range Max	254	V
Compressor RLA	55.8/55.8	
Compressor LRA	340/340	
Compressor Quantity	1 (Circ A), 1 (Circ B)	
Fan Motors Qty	2	
Fan Motor FLA	NA	Amps
Notice: Outdoor unit elect. data is based on 208-3-60		

FIOPS and Accessories Information

FIOPS	Quantity
Standard Line Length RTPF	1
Export packaging, (Skid + Bag)	1
Scrolling Marquee EMM, BACnet Communication	1
Accessories	**Quantity**
Thermostat for Outdoor Unit	1
Navigator for Outdoor Unit	1

Liquid line check valve(s) prevent charge migration to compressor. These valves may be required for certain applications, refer to PD.

Acoustic Information

A-Wgt Outdoor Sound Power Level 94.9 dbA

Acoustic Notes:

1. The acoustic center of the unit is located at the geometric center of the unit
2. All estimated sound power levels dB re 1 Pico watt should not be guaranteed or certified as being the actual sound power levels.

Performance Summary For HSS BUILDING 30T 112221

Project: HA-1702-21-11 UOG IFB B21-17 PURCHASING HVAC EQUIP
Prepared By: BERNARD LLARENAS

02:16PM

Advanced Acoustics Parameters

1. Unit height above ground: **1.0** ft
2. Horizontal distance from unit to receiver: **20.0** ft
3. Receiver height above ground: **5.7** ft
4. Height of obstruction: **0.0** ft
5. Horizontal dist. from obstruction to receiver: **0.0** ft
6. Horizontal dist. from unit to obstruction: **0.0** ft

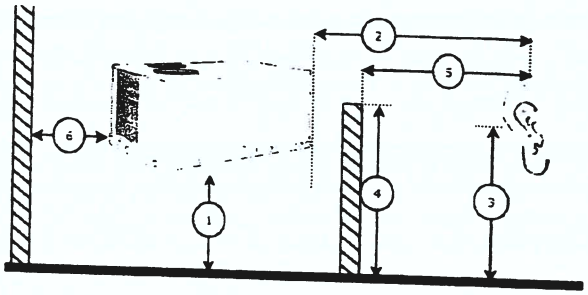

Detailed Acoustics Information

Octave Band Center Frequency, Hz	31	63	125	250	500	1k	2k	4k	8k	Overa
Sound Power Levels at Unit's Acoustic Center (Lw), dB	77	96	93	92	93	90	87	84	80	101
A-Wgted Sound Power Levels at Unit's Acoustic Center (LwA), dBA	37	70	77	84	89	90	88	85	79	95
Sound Press. Levels at Dist. Specified above (Lp), dB	52	72	69	68	68	66	62	59	56	76
A-Wgted Sound Press. Levels at Dist. Specified above (LpA), dBA	13	46	53	59	65	66	64	60	55	71

Calculation methods used in this program are patterned after the ASHRAE Guide, other ASHRAE Publications and the AHRI Acoustical Standards. While a very significant effort has been made to insure the technical accuracy of this program, it is assumed that the user is knowledgeable in the art of system sound estimation and is aware of the tolerances involved in real world acoustical estimation. This program makes certain assumptions as to the dominant sound sources and sound paths which may not always be appropriate to the real system being estimated. Because of this, no assurances can be offered that this software will always generate an accurate sound prediction from user supplied input data. If in doubt about the estimation of expected sound levels in a space, an Acoustical Engineer or a person with sound prediction expertise should be consulted.

Acoustic Summary For HSS BUILDING 30T 112221

Project: HA-1702-21-11 UOG IFB B21-17 PURCHASING HVAC EQUIP
Prepared By: BERNARD LLARENAS

02:16PM

Outdoor Unit Parameters:

Tag Name ..... **HSS BUILDING 30T 112221**
Unit Model **38APD**
Unit Size: ..... **30 Tons**
System Type: ..... **Dx Cooling Only**
Refrigerant Type: ..... **PURON**
Compressor Quantity: ..... **1 (Circ A), 1 (Circ B)**
Compressor Type: ..... **Scroll**

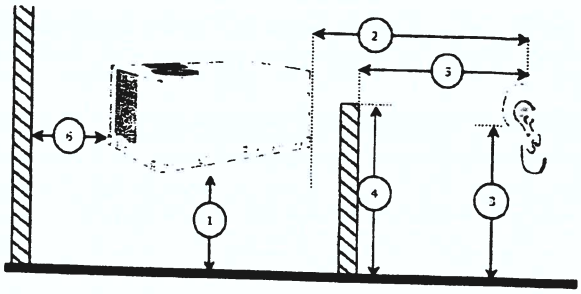

Advanced Accoustics Parameters

1. Unit height above ground ..... **1.0** ft
2. Horizontal distance from unit to receiver ..... **20.0** ft
3. Receiver height above ground ..... **5.7** ft
4. Height of obstruction ..... **0.0** ft
5. Horizontal distance from obstruction to receiver ..... **0.0** ft
6. Horizontal distance from unit to obstruction ..... **0.0** ft

Detailed Acoustics Information

Octave Band Center Frequency, Hz	31	63	125	250	500	1k	2k	4k	8k	Overa
Sound Power Levels at Unit's Acoustic Center (Lw), dB	77	96	93	92	93	90	87	84	80	101
A-Wgted Sound Power Levels at Unit's Acoustic Center (LwA), dBA	37	70	77	84	89	90	88	85	79	95
Sound Press Levels at Dist. Specified above (Lp), dB	52	72	69	68	68	66	62	59	56	76
A-Wgted Sound Press Levels at Dist Specified above (LpA), dBA	13	46	53	59	65	66	64	60	55	71

Calculation methods used in this program are patterned after the ASHRAE Guide, other ASHRAE Publications and the AHRI Acoustical Standards While a very significant effort has been made to insure the technical accuracy of this program, it is assumed that the user is knowledgeable in the art of system sound estimation and is aware of the tolerances involved in real world acoustical estimation This program makes certain assumptions as to the dominant sound sources and sound paths which may not always be appropriate to the real system being estimated. Because of this, no assurances can be offered that this software will always generate an accurate sound prediction from user supplied input data. If in doubt about the estimation of expected sound levels in a space, an Acoustical Engineer or a person with sound prediction expertise should be consulted

Acoustic Note:

1. Estimated Sound Power levels - dB re: 1 picowatt
2. Estimated Sound Pressure levels - dB re: 20 micropascal
3. Estimated sound levels given above are assumed to originate at the acoustic center of the unit. The acoustic center of the unit is located at the projection of the condensing unit's geometric center of its base

4. Sound power levels shown above were determined in accordance with ARI standard 370 for large outdoor refrigeration and air conditioning equipment

5. Calculation methods used in this program are patterned after the ASHRAE Guide; other ASHRAE Publications and the ARI Acoustical Standards. While a very significant effort has been made to insure the technical accuracy of this program, it is assumed that the user is knowledgeable in the art of system sound estimation and is aware of the tolerances involved in real world acoustical estimation. This program makes certain assumptions as to the dominant sound sources and sound paths which may not always be appropriate to the real system being estimated. Because of this, no assurances can be offered that this software will always generate an accurate sound prediction from user supplied input data. If in doubt about the estimation of expected sound levels in a space, an Acoustical Engineer or a person with sound prediction expertise should be consulted.

Certified Drawing for HSS BUILDING 30T 112221

Project: HA-1702-21-11 UOG IFB B21-17 PURCHASING HVAC EQUIP
Prepared By: BERNARD LLARENAS

12/01/2021
02:16PM

	UNIT	STD UNIT WT LBS.	STD UNIT WT KG.	CENTER OF GRAVITY X	CENTER OF GRAVITY Y	UNIT HEIGHT H	POWER ENTRY P	SERVICE VALVE CONNECTIONS SUCTION	SERVICE VALVE CONNECTIONS LIQUID
STANDARD	38APS025	1077	489	17.8 [452]	36 9 [937]	61 0 [1549]	24 9 [632]	1-5/8 [41]	5/8 [16]
	38APD025	1095	497	17 0 [452]	37.0 [940]			1-3/8 [35]	5/8 [16]
	38APS027	1240	563	18 2 [462]	37.6 [955]	73 1 [1857]	36 9 [937]	1-5/8 [41]	5/8 [16]
	38APD027	1258	571	18 2 [462]	37 6 [955]			1-3/8 [35]	5/8 [16]
	38APS030	1246	565	18 2 [462]	37.5 [953]			1-5/8 [41]	7/8 [22]
	38APD030	1264	573	18.2 [462]	37 6 [955]			1-3/8 [35]	5/8 [16]
LOW SOUND	38APS025	1113	505	17.8 [452]	36 9 [937]	66.5 [1689]	24 9 [632]	1-5/8 [41]	5/8 [16]
	38APD025	1131	513	17.8 [452]	37 0 [940]			1-3/8 [35]	5/8 [16]
	38APS027	1276	578	18.2 [462]	37 6 [955]	78 6 [1996]	36 9 [937]	1-5/8 [41]	5/8 [16]
	38APD027	1294	587	18 2 [462]	37 6 [955]			1-3/8 [35]	5/8 [16]
	38APS030	1282	582	18 2 [462]	37 5 [953]			1-5/8 [41]	7/8 [22]
	38APD030	1300	590	18 2 [462]	37 6 [955]			1-3/8 [35]	5/8 [16]

NOTES

1. BE SURE TO USE A WET RAG AND REMOVE ALL VALVE CORES BEFORE BRAZING FIELD PIPING
2. DO NOT CAP OR OTHERWISE OBSTRUCT THE LIQUID LINE TEMPERATURE RELIEF
3. Ø7/8 [22.4] PILOT HOLE PROVIDED FOR LOCATING FIELD POWER WIRING ACTUAL HOLE REQUIRED DEPENDS ON FIELD WIRE SIZING
4. Ø0 437 [11.14] HOLE USED FOR MOUNTING UNIT
5. UNIT MUST HAVE CLEARANCES AS FOLLOWS
   TOP - DO NOT RESTRICT
   COIL END - 42 [1067] FROM SOLID SURFACE
   PANEL SIDE - 48 [1219] PER NEC
6. SEE TABLE COLUMN H, DIMENSION FOR STANDARD AND LOW SOUND WITH STACK FAN OPTION
7. CARRIER DOES NOT RECOMMEND INSTALLATION IN A PIT
8. UNIT CAN BE HANDLED USING THE FORK TRUCK LIFT POCKETS.
9. DIMENSIONS SHOWN IN INCHES [MM]
10. WEIGHT DOES NOT INCLUDE REFRIGERANT CHARGE
11. FOR 38APS PIPING, REFER TO "CIRCUIT A LIQUID CONNECTION" AND "CIRCUIT A SUCTION CONNECTION" DIMENSIONS SHOWN

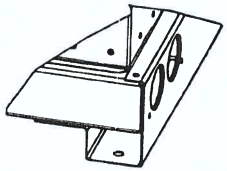

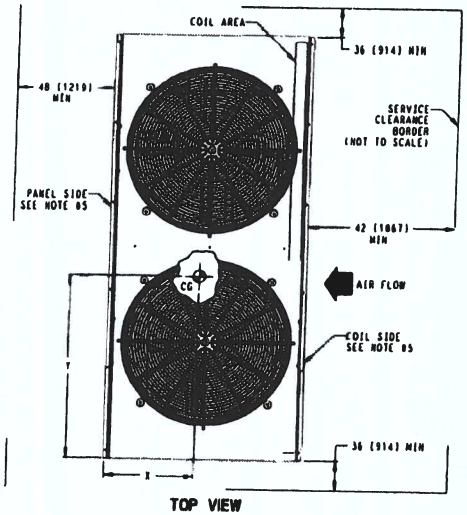

TOP VIEW

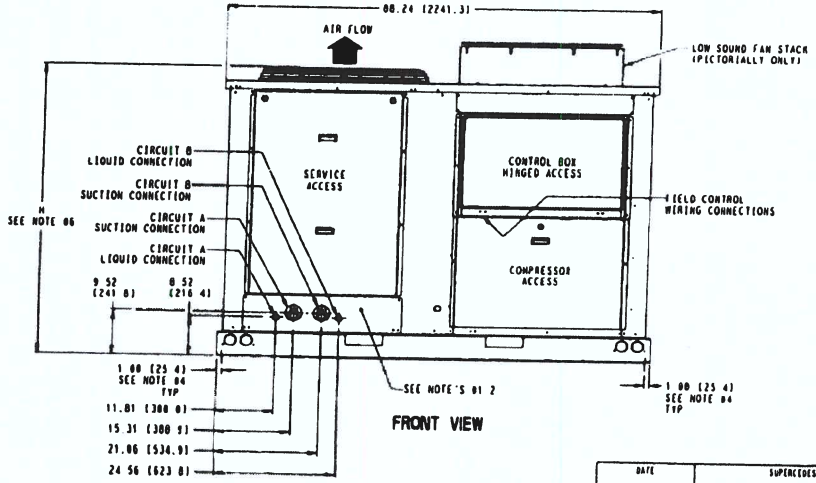

FRONT VIEW

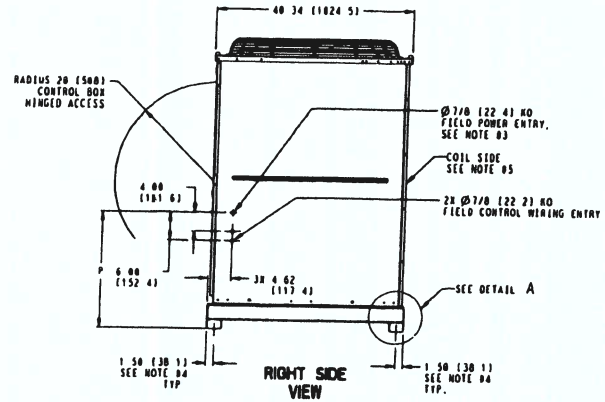

RIGHT SIDE VIEW

UNITED TECHNOLOGIES CARRIER — P O BOX 4808 SYRACUSE, NY 13221

SUBMISSION OF THESE DRAWINGS OR DOCUMENTS DOES NOT CONSTITUTE PART PERFORMANCE OR ACCEPTANCE OF CONTRACT

DATE	SUPERCEDES			REV
04/09/12	D	38AP025-030 UNIT ASSY	38AP555555	E

GUIDE SPECIFICATIONS – 38APD03056-3009J

HVAC Guide Specifications
Commercial Air-Cooled Condensing Units with Puron® Refrigerant (R-410A)

Size: 030

Part 1: General

SYSTEM DESCRIPTION

1.01. Outdoor-mounted, air-cooled condensing unit with Puron® refrigerant (R-410A) suitable for on-the-ground or rooftop installation. The 38APD unit shall have two independent refrigeration circuits and shall consist of two, four, five or six rotary scroll compressors. Unit shall have air-cooled coils, propeller-type condenser fans, a control box, and shall discharge condenser air vertically upward as shown on certified drawings. Unit shall be used in refrigeration circuit with a central station air-handling unit or direct-expansion coils.

QUALITY ASSURANCE

1.01 Unit performance shall be rated in accordance with AHRI (Air-Conditioning, Heating, and Refrigeration Institute) Standard 365, latest edition (U.S.A).

1.02. Unit construction shall comply with latest edition of ASHRAE (American Society of Heating, Refrigerating, and Air-Conditioning Engineers) 15 Safety Code, UL 1995, and ASME (American Society of Mechanical Engineers) applicable codes (U.S.A. codes)

1.03. The management system governing the manufacturer of the product is ISO (International Organization for Standardization) 9001:2015 certified.

1.04. Base unit shall be constructed in accordance with UL (Underwriters Laboratories) standards and CSA (Canadian Standards Association)..

1.05. Painted parts shall withstand 1000 hours in constant neutral salt spray under ASTM B117 conditions with a 1mm scribe per ASTM D1654. After test, painted parts shall show no signs of wrinkling or cracking, no loss of adhesion, no evidence of blistering, and the mean creepage shall not exceed 1/4 in. (Rating = 4 per ASTM D1654) on either side of the scribe line.

1.06. Design pressure shall be 650 psig (4482 kPa).

1.07. Unit shall be functional checked at the factory.

1.08. Lifting holes shall be provided to facilitate rigging.

DELIVERY, STORAGE, AND HANDLING

1.01. Unit shall be shipped as single package and shall be stored and handled per unit manufacturer's recommendations.

WARRANTY (FOR INCLUSION BY SPECIFYING ENGINEER)

Part 2: Products

EQUIPMENT

2.01. General:

A. Factory assembled, single-piece, air-cooled condensing unit. Contained within the unit enclosure shall be all factory wiring, piping, controls, compressors, nitrogen holding charge, and special features required prior to field start-up.

2.02. Unit Cabinet:

A. Cabinet shall be galvanized steel casing with a baked enamel powder or pre-painted finish.

B. Control box access panels shall be hinged for service access

2.03. Fans:

A. Condenser fans shall be direct-drive propeller type, discharging air vertically upward.

B. All condenser fan motors shall be totally enclosed 3-phase type with permanently lubricated ball bearings, class F insulation and internal, automatic-reset thermal overload protection or manual reset calibrated circuit breakers.

C. Shafts shall have inherent corrosion resistance.

D. Fan blades shall be statically and dynamically balanced.

E. Condenser-fan openings shall be equipped with PVC-coated steel wire safety guards.

2.04. Compressors:

A. Compressors shall be rotary scroll.

B. Operating oil charge and a crankcase heater control oil dilution.

C. Compressors shall be mounted on two rails having rubber in shear vibration isolators.

D. Staging of compressors shall provide unloading capability.

E. Compressor motors shall be cooled by refrigerant gas passing through motor windings and shall have either internal line break thermal and current overload protection or external current overload modules with compressor temperature sensors.

2.05. Condenser Coils:

A. Coil shall be air-cooled microchannel heat exchanger (MCHX) and shall have a series of flat tubes containing a series of multiple, parallel flow microchannels layered between the refrigerant manifolds. Microchannel coils shall consist of a two-pass arrangement. Coil construction shall consist of aluminum alloys for the fins, tubes and manifolds in combination with a corrosion-resistant coating on the tubes.

B. Tubes shall be cleaned, dehydrated, and sealed.

C. Assembled condenser coils shall be leak tested and pressure tested at 650 psig (4482 kPa)

2.06. Refrigeration Components:

A. Refrigeration circuit components shall include liquid line temperature relief device, pressure transducers, liquid line shutoff valve, suction shutoff valve, suction line accumulators, nitrogen holding charge, and compressor oil.

B. Standard line length (0-100 ft)

C. Long line length check valves are required for liquid line installation on all linear line length applications of more than 100 ft (30.5 m) to prevent liquid migration during unit shutdown. For any 025-030 size dual circuit unit application where evaporator is located higher than the condensing unit, check valves are required for linear line length above 55 ft (16.8 m).

D. Units shall include one factory-installed suction line accumulator for each refrigerant circuit.

2.07. Controls and Safeties:

A. Unit ComfortLink controls shall include:

1. Scrolling marquee display module shall be used for accessing condensing unit information, reading sensor values, and testing the condensing unit. The scrolling marquee display is a 4-key, 4-character, 16-segment LED (light-emitting diode) display. Eleven mode LEDs shall be located on the display as well as an Alarm Status LED. The display shows all of the ComfortLink control codes (with 60-character expandable clear language), plus set points, time of day, temperatures, pressures, and superheat. Additional information can be displayed all at once with the accessory Navigator™ display.
2. Carrier Comfort Network® (CCN) system capability.
3. Unit control with standard pressure transducer, discharge pressure transducer and suction temperature thermistors.
4. Current alarm list and alarm history list on display.
5. Automatic compressor lead/lag control.
6. Service run test capability.
7. Compressor minimum run time (3 minutes) and minimum off time (3 minutes).
8. Service diagnostic mode.
9. Self-contained low voltage control circuit.
10. Cycle condenser fans to maintain proper head pressure control.
11. Capacity control with staging compressors.

12. Alarm relay output to indicate when unit is in alarm condition.

B. Minimum unit safety devices shall include:

1. Solid-state compressor lockout to provide optional reset capability at the space thermostat if any of the following safety devices trip and shut off compressor.
   a. Compressor lockout protection for internal or external overload.
   b. Low pressure protection.
   c. High pressure protection (high pressure switch or internal).
   d. Compressor reverse rotation protection.
   e. Loss of charge protection.
   f. Low suction superheat protection.
   g. Short cycle protection.
   h. Suction and discharge pressure transducers.
   i. Circuit breakers or fuses for short circuit protection of compressors.

2.08 Operating Characteristics:

A. The capacity of the condensing unit shall meet or exceed ____ Btuh (____ kW) at a suction temperature of ____ F (____ C). The power consumption at full load shall not exceed ____ Btuh (____ kW).

B. The combination of the condensing unit and the evaporator or air handling unit shall have a total net cooling capacity of ____ Btuh (____ kW) or greater at conditions of ____ cfm (____ L/s) entering-air temperature at the evaporator at ____ F (____ C) wet bulb and ____ F (____ C) dry bulb, and air entering the condensing unit at ____ F (____ C).

C. The system shall have an Energy Efficiency Ratio (EER) of ____ Btuh/watt or greater at standard AHRI conditions.

2.09. Electrical Requirements:

A. All unit power wiring shall enter unit cabinet at a single location. Unit shall be provided with a XL starter and a terminal block.

2.10. Special Features:

A. Optional E-coated copper-fin coils:

1. Coil shall have a flexible epoxy polymer coating uniformly applied to all coil surface areas without material bridging between fins. Coating process shall ensure complete coil encapsulation. Color shall be high gloss black with gloss; 60° of 65 to 90% per ASTM D523-89. Uniform dry film thickness from 0.8 to 1.2 mil on all surface areas including fin edges. Superior hardness characteristics of 2H per ASTM D3363-92A and cross hatch adhesion of 4B-5B per ASTM D3359-93. Impact resistance shall be up to 160 in./lb (ASTM D2794-93). Humidity and water immersion resistance shall be up to minimum 1000 and 250 hours respectively (ASTM D2247-92 and ASTM D870-92). Corrosion durability shall be confirmed through testing to no less than 3000 hours salt spray per ASTM B117-90. Coil construction shall be copper-fins mechanically bonded to copper tube sheets. Galvanized steel tube sheets shall not be acceptable. A polymer strip shall prevent coil assembly from contacting sheet metal coil pan to maintain coating integrity and minimize corrosion potential between the coil and pan.

B. Navigator™ Hand Held Display:

1. Portable hand held display module with a minimum of 4 lines and 20 characters per line, of clear English, French, Spanish, or Portuguese language.
2. Display menus shall provide clear language descriptions of all menu items, operating modes, configuration points and alarm diagnostics. Reference to factory codes shall not be accepted.
3. RJ-14 connection plug shall allow display module to be connected to factory-installed receptacle.
4. Industrial grade coiled extension cord shall allow the display module to be moved around the unit.
5. Magnets shall hold the display module to any sheet metal panel to allow hands-free operation.
6. Display module shall have NEMA (National Electrical Manufacturers Association, U.S.A.) 4x housing suitable for use in outdoor environments.
7. Display shall have back light and contrast adjustment for easy viewing in bright sunlight or night conditions.
8. Navigator module shall have raised surface buttons with positive tactile response.
9. Navigator module shall be available as field-installed accessory for all units.

C. BACnet Communication Option:
   1. The BACnet Communication option shall provide factory-installed communication capability with a BACnet MS/TP network. Allows integration with i-Vu® Open control system or a BACnet building automation system.

D. Energy Management Module (EMM):
   1. The EMM shall provide remote set point, demand limit control, and percent capacity input. The EMM is not needed with use of BACnet or LON accessory kit.

38AP GEMINISELECT AIR COOLED CONDENSING UNITS

These condensing units feature two independent refrigerant circuits, each circuit having its own highly efficient scroll compressors. All units are factory wired, nitrogen charged, and easily connected by refrigerant lines and control wiring to the matching Carrier air-handling unit (40RU or 39 Series). Various combinations of these extremely flexible condensing units matched with air handlers provide customized packages to cover a wide range of cooling requirements. Low roof-load weight distribution and weatherproof construction make these units excellent selections for rooftop or on-the-ground installations. These 38AP condensing units are well suited for commercial or industrial air conditioning applications.

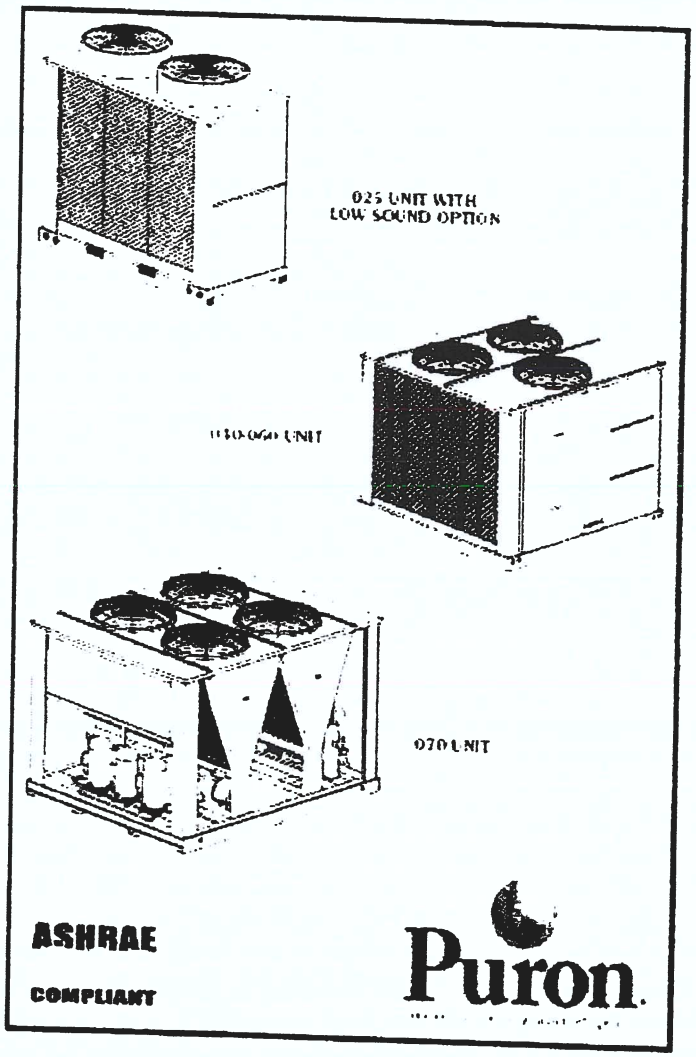

These dependable split systems match Carrier's 40RU or 39 Series indoor-air handlers with the versatile outdoor 38AP condensing units for a wide selection of commercial cooling solutions.

- Split condensing units compatible with ASHRAE 90.1
- Chlorine-free, non-ozone depleting Puron refrigerant (R-410A)
- Condenser coils feature the Novation® heat exchanger with microchannel coil technology
- 38APS single-circuit unit has up to 3 rotary scroll compressors
- 38APD unit has up to 6 rotary scroll compressors with 2 independent circuits
- Standard scroll compressor units operate as low as 33% (single circuit) or 15% (dual circuit) of nominal capacity
- Optional digital scroll compressors allow incremental unloading down to 10% (single circuit) or 5% (dual circuit) of nominal capacity for VAV applications
- Protection against high discharge and low suction refrigerant pressure, and low oil pressure

TAB 4

UNIVERSITY OF GUAM
UNIBETSEDÅT GUÅHAN

ADMINISTRATION & FINANCE
Consolidated Procurement Office

RFP / BID ROUTING SLIP

Date: June 2, 2021

From: Emily G. Gumataotao, SMA – UOG Procurement Office

Subject: UOG BID NO. B21-17: Purchasing of HVAC Units for the University of Guam

Unit: Administration and Finance

Estimate: **$647,574**

G/L Account Number: 63-2J-363049-T-5

Budget Verified by: VIRGILIA AQUINO VIRGILIA AQUINO (Sep 20, 2021 08:40 GMT+10) & MERLITA AZICATE

Print / Signature

Liza J. Provido, Chairperson
UOG Board of Regents
Liza Provido (Sep 21, 2021 11:34 GMT+10) — Sep 20, 2021
Signature — Date

Mike W. Naholowaa, Treasurer
UOG Board of Regents
Mike Naholowaa (Sep 21, 2021 10:57 GMT+10) — Sep 20, 2021
Signature — Date

Thomas W. Krise, Ph.D., President
Review: (Estimate over $100 K)
Thomas Krise (Sep 20, 2021 11:14 GMT+10) — Sep 20, 2021
Signature — Date

Approved to form:
Anthony R. Camacho, General Counsel
Anthony R. Camacho — 9/16/21
Signature — Date

Randall V. Wiegand, Vice President
Administration and Finance
Sep 20, 2021
Signature — Date

Dr. Anita B. Enriquez
Senior Vice President & Provost
Anita Borja Enriquez (Sep 20, 2021 10:30 GMT+10) — Sep 20, 2021
Signature — Date

Abigail Martin, Interim Comptroller
Review: (Budget & Procurement)
Sep 20, 2021
Signature — Date

RETURN TO PROCUREMENT FOR PROCESSING

T: +1 671.735.2925 F: +1 671.735.3010 W: www.uog.edu E: uog.bids@triton.uog.edu
Mailing Address: 303 University Drive UOG Station Mangilao, Guam 96913

MEMORANDUM FOR RECORD

September 15, 2021

RE: Written Determination of need for HVAC Equipment.

Greetings,

This determination is made to comply with 5 G.C.A. §5249(e) and Section 3.27.3.5, UOG Procurement Regulations. The University of Guam's Facilities Management & Services has determined that the purchasing of new HVAC equipment for UOG's RFK Library, PIP/GlE Building, Science Building, English Communication Building, the Computer Center, the Lectur Hall Auditorium, Marine Lab, and the HSS Building are required to replace old and worn out units that require greater maintenance to operate, and to maintain a healthy climate in those buildings.

SUBMITTED this 15th day of September, 2021 by:

GLENN A. LEON GUERRERO, MBA.
Director, UOG Facilities Management & Services

MEMORANDUM FOR RECORD

September 15, 2021

RE: Written Determination to solicit for and use a Multi-Term Contract for UOG-IFB-B21-17 (Purchasing of HVAC Units for UOG)

Greetings,

This determination is made to comply with Section 3.21.4, UOG Procurement Regulations. Prior to the issuance of the UOG-IFB-B21-17 (Purchasing of HVAC Units for UOG), the undersigned hereby determined the following:

1. The furnishing of long-term optional services for the HVAC Units, such as services for maintenance and upkeep of the new HVAC Units, services for their disposal, and a replacement or trade in program are required to meet the University's need for new HVAC Units.

2. A multi-term contract will serve the best interest of the University by promoting economies in the University's procurement because a change of the vendor providing the optional services stated above from one fiscal year to the next involves phase-in and phase-out costs during transition periods.

3. The cost and burden of contract solicitation, award, and administration of procuring contractors to perform the optional services described above may be reduced with a multi-term contract.

SUBMITTED this 15th day of September, 2021 by:

EMILY G. GUMATAOTAO
Supply Management Administrator

UNIVERSITY OF GUAM
UNIBETSEDÅT GUÅHAN

ADMINISTRATION & FINANCE
Consolidated Procurement Office

Date: June 2, 2021

TO: **Pacific Daily News (PDN) / Guam Daily Post (POST)**

FROM: Emily Gumataotao, SMA UOG Procurement Office (uog.bids@triton.uog.edu)

Please charge attached print advertisement to our purchase order _____.

Advertisement for: B21-17
HVAC Units for the University of Guam
FMS

Glenn Leon Guerrero, Director FMS
Departmental Approval

VIRGILIA AQUINO (Sep 20, 2021 08:40 GMT+10)

Dates to run

Certified by

3x4

Sizes

63-2J-363049-T-5201035 / **FMS**
Account No. / Department

T: +1 671.735.2925 F: +1 671.735.3010 W: www.uog.edu E: uog.bids@triton.uog.edu
Mailing Address: 303 University Drive UOG Station Mangilao, Guam 96913

UNIVERSITY OF GUAM
UNIBETSEDÅT GUÅHAN

ADMINISTRATION & FINANCE
Consolidated Procurement Office

INVITATION FOR BID (IFB)
UOG BID NO. B21-17

The University of Guam is soliciting sealed bids for the PURCHASING OF HVAC EQUIPMENT For The University of Guam

Copies of the Bid Package and Instructions and Information may be obtained from:

OFFICE:	UOG Procurement Office
TELEPHONE:	(671) 735-2925
FAX NO.:	(671) 735-3010
LOCATION:	UOG Administration Building (ANNEX BUILDING) Mangilao, Guam
E-MAIL:	uog.bids@triton.uog.edu

A non-refundable fee of $25.00 is required to obtain a bid package. Payment may be made via cash, check or credit card at the UOG Business Office, Cashier Services located at the UOG Administration Building Mon-Fri from 8 am - 4 pm by appointment only. Pay by phone is available from 8 am - 4 pm. You may schedule an appointment with our cashier services at 735-2923/45/46, please reference Bid number and title when making payment. Send proof of receipt to the Procurement Office.

In accordance with 5 G.C.A. §5220(a), a digital copy of this solicitation shall be posted on UOG's website at uog.bids@triton.uog.edu. No fees shall be assessed to potential bidders or other parties for accessing or downloading a copy of this solicitation from UOG's website. Potential bidders who access or download a copy of this solicitation from UOG's website must register their contact information with UOG to ensure that they receive any notices regarding any changes or updates to this solicitation. In accordance with 5 G.C.A. §5220(b), UOG shall not be liable for failure to provide notice to any party who accesses or downloads a copy of this solicitation from UOG's website and who fails to register their contact information with UOG as required herein. Please have subject line reference as indicated the *UOG Bid number, Bid Title, and your Company or Requestor's Name to register for UOG's Bid Distribution Registry.*

Deadline for Submission of Bid Packages is on _____, _____ ____, 2021 on or before 2:00 P.M. via electronic submission to electronic Bid Share folder provided by UOG Procurement Office.

/s/ Thomas W. Krise, Ph.D.
President

University of Guam is an equal opportunity employer and provider.
This Advertisement is paid for by University of Guam Funds.

AUTHORIZED FOR ANNOUNCEMENT

_____
Thomas W. Krise, Ph.D. President

UNIVERSITY OF GUAM
UNIBETSEDÅT GUÅHAN

ADMINISTRATION & FINANCE
Consolidated Procurement Office

UOG BIDDERS DISTRIBUTION REGISTRY FORM FOR UOG BID NO. B21-017

INFORMATION ON INTERESTED BIDDER FOR BID REGISTRY ENTRY MUST BE RECEIVED BY UOG'S PROCUREMENT OFFICE PRIOR TO RECEIVING ANY DISTRIBUTED COPY SET OF THIS IFB (WITH OR WITHOUT THE BID FEE)

NOTICE:

ALL DISTRIBUTIONS OF THIS BID PACKET MUST BE RECORDED IN THE BID'S REGISTRY (LOG) AT UOG'S CONSOLIDATED PROCUREMENT OFFICE.

THE BID REGISTRY ALSO PROVIDES THE NECESSARY CONTACT INFORMATION NEEDED TO DISTRIBUTE FUTURE AMENDMENTS, ADDENDUMS, AND CLARIFICATIONS FOR THIS BID PACKET.

UOG PAYMENT RECEIPT NO. _____ DATE: ___/___/___ TIME: _____

PAYMENT METHOD: [ ] CASH [ ] CHECK NO. _____ [ ] CREDIT CARD _____

NAME OF COMPANY: _____

PHYSICAL ADDRESS: _____

MAILING ADDRESS: _____

CONTACT PERSON & TITLE: _____

CONTACT NUMBERS: TELEPHONE _____ FAX _____ CELLULAR _____

E-MAIL ADDRESS: _____

OTHER CONTACT INFORMATION OR HELPFUL INSTRUCTIONS FOR UOG WHEN FORWARDING FUTURE UPDATES:

UNIVERSITY OF GUAM - CONSOLIDATED PROCUREMENT OFFICE
UOG Station, Mangilao, Guam 96923 Tel. (671) 735.2925 Fax. (671) 735.3010
A U.S. LAND GRANT INSTITUTION ACCREDITED BY THE WESTERN ASSOCIATION OF SCHOOLS & COLLEGES
THE UNIVERSITY OF GUAM IS AN EQUAL OPPORTUNITY EMPLOYER AND PROVIDER

TABLE OF CONTENTS

UNIVERSITY OF GUAM
INVITATION FOR BID UOG BID NO. B21-17
PURCHASING OF HVAC EQUIPMENT FOR THE UNIVERSITY OF GUAM

DATE ISSUED: JUNE 1, 2021

UOG SECTION: FACILITIES MANAGEMENT & SERVICES (FMS), ADMINISTRATION & FINANCE

ISSUED BY: UOG CONSOLIDATED PROCUREMENT OFFICE
TELEPHONE NO.: (671) 735-2925 FAX NO.: (671) 735-3010
E-MAIL: uog.bids@triton.uog.edu

INSTRUCTIONS TO BIDDERS

1. RECEIPT AND OPENING OF BIDS: Sealed bids for UOG **B21-17** PURCHASING OF HVAC EQUIPMENT FOR THE UNIVERSITY OF GUAM (UOG) must be received by the Procurement Office nolater than:

   TIME: 2:00 P.M. DATE: _____, _____, _____, 2021

   Bids submitted after the time and date specified above shall be rejected. Bid opening will be conducted electronically via Zoom Link at 4:00 pm; link will be provided through email to all registered offerors.

   Attention is called to the fact that bidders not only offer to assume the obligations and liabilities imposed upon the contractor in the form of a contract, but are expressly made certain of the representations and warrants made herein. No effort is made to emphasize any particular provision of the contract, but biddersmust familiarize themselves with every provision and its effect. This Bid is subject to **General Terms and Conditions of the Invitation for Sealed Bids (Attachment A) and the Special General Provisions (Attachment B).**

   In consideration of the expense of the University of Guam of opening, tabulating, and evaluating this and other bids, and other considerations, the undersigned agrees that this bid shall remain firm and irrevocablewithin sixty (60) calendar days from the date of opening to supply any or all of items for which prices are quoted.

2. BIDDER QUALIFICATIONS (Attachment C): The University of Guam may require bidders to presentsatisfactory evidence that they have sufficient experience and that they are fully prepared, thus it is required that the bidder completely fill out the Bidder's Qualifications Form.

3. NON-COLLUSION AFFIDAVIT (Attachment D): Each person submitting a bid for any portion of the work covered by the bidding documents shall execute an affidavit, in the form provided with the Bid to theeffect that he has not colluded with any other person, firm or corporation in regard to any bid submitted. Such affidavit shall be attached to the proposal.

4. MAJOR SHAREHOLDERS AFFIDAVIT (Attachment E): As a condition to submitting of bids or proposals, any partnership, sole proprietorship or corporation doing business with the University of Guam shall submit an affidavit that lists the name and address of any person who has held more than ten percent (10) of outstanding shares in said partnership, sole proprietorship or corporation at any time during the twelve (12) month period immediately preceding submission of a proposal. The affidavit shall contain thenumber of shares or the percentage of all assets of such partnership, sole proprietorship or corporation which have been held by each person during the twelve (12) month period. In addition, the affidavit shall contain the name and address of any person who has received or is entitled to receive a commission, gratuity or other compensation for the procuring or assisting in obtaining business related to the bid or proposal for the Offeror and shall contain the amounts of any shall commission, gratuity or other compensation. The affidavit shall be open and available for inspection and copying.

5. AFFIDAVIT RE GRATUITIES, KICKBACKS AND FAVORS (Attachment G): The bidder, offeror or contractor represents that it will not violate the prohibition against gratuities and kickbacks and favors set forth (Gratuities and Kickbacks) in 5 GCA, Chapter 5, Article 11, Ethics in Public Contracting and Section 11.7 (Gratuities and Kickbacks and Favors) of the UOG Procurement Manual.

6. AFFIDAVIT RE ETHICAL STANDARDS (Attachment H): The bidder, offeror, or contractor representsthat it has not knowingly influenced and promises that it will not knowingly influence a government employee to breach any of the ethical standards set forth in 5 GCA, Chapter 5, Article 11, and in Chapter 11 (Ethics in Public Contracting) of the UOG Procurement Manual.

7. COVENANT AGAINST CONTINGENT FEES (Attachment I): The prospective contractor represents aspart of such contractor's bid or proposal that such contractor has/has not (Circle applicable word or words) retained any person or agency on a percentage, commission, or other contingent arrangement, except for retention of bona fide employees or bona fide established commercial selling agencies for the purpose of securing business.

8. DECLARATION RE COMPLIANCE WITH U.S. DEPARTMENT OF LABOR WAGE DETERMINATION (Attachment J): In accordance with 5 GCA §§ 5801 and 5802, as may be applicable, each bidder certifies that any of its employees whose purpose, in whole or in part, is the direct delivery of service contracted by the University shall be paid in accordance with the Wage Determination for Guam and the Northern Mariana Islands issued and promulgated by the U.S. Department of Labor for such labor as is employed in the direct delivery of contract deliverables to the University, including health and other similar benefits. Theupdated wage rate with the most current revision shall be included in the bid submission.

9. RIGHT TO ACCEPT AND REJECT BIDS: The President of the University of Guam reserves the unqualified right, in his sole and absolute discretion, to reject any and all bids, or to accept that bid or combination of bids, if any, which in his sole and absolute judgment will under all circumstances best servethe interests of the University of Guam. In the event that the successful bidder fails to execute the contract upon his part or to furnish a satisfactory performance and payment bond, the University, after declaring thesecurity deposit of such bidder forfeited, reserves the option to accept the bid of any other bidder within ten (10) days from such default, in which case such acceptance shall have the same effect as to such bidderas though he was the originally successful bidder.

10. MODIFICATIONS PRIOR TO DATE SET FOR OPENING BIDS: The University reserves the right to revise or amend the specifications prior to the date set for opening bids. Such revisions and amendments, ifany, will be announced by an amendment or amendments to this Invitation for Bids and shall be identified as such. It is required that the bidders acknowledge in writing receipt of all amendments issued and such acknowledgment must be included in the bid. The

amendment shall refer to the portions of the Invitation forBids it amends. Amendments shall be sent to all prospective Bidders known to have received an Invitation for Bids. Amendments shall be distributed within a reasonable time to allow prospective Bidders to considerthe amendment in preparing their Bids. If the time and date set for receipt of bids will not permit such preparation, such time shall be increased to the extent possible in the amendment or, if necessary, by email or telephone and confirmed in the amendment.

11. CANCELLATION OF SOLICITATION: Prior to the date set for opening bids, a solicitation may be cancelled in whole or in part when the President or his designee determines in writing that the cancellation of the solicitation is in the University's best interest, in accordance with the University's Procurement Rulesand Regulations.

12. METHOD OF AWARD: Bid shall be awarded to the [x] lowest, [ ] highest, responsible and responsive bidder whose bid meets the requirements and criteria set forth in the Invitation for Bids. A responsible bidder is one who has the capability in all respects to perform fully the contract requirements, and the integrity and reliability which will assure good faith performance. A responsive bidder is one who has submitted a bid which conforms in all material respects to the Invitation for Bids. The University reserves the right to waive any minor information of irregularity in Bids received. The President shall have the authority to award or reject Bids, in whole or in part for any one or more items if he determines it is in the public interest.

Award issued to the [x] lowest, [ ] highest, responsible and responsive bidder within the specified time foracceptance as indicated in the Bid, results in a binding contract without further action by either party provided the successful bidder executes a formal contract with the University. In case of any error in the extension of prices, unit price will govern. It is the policy of the Government of Guam to award Bids to qualified local vendors.

13. SUBMISSION OF BIDS:

a. Bids and modifications thereof shall be submitted through electronic submission to the Share folder that UOG procurement office provides and addressed to the office specified in the Solicitation. The electronic file submission will show the hour and date of submission as specifiedin the Solicitation for receipt. The file should identify the Solicitation number, and the name of the bidder.

b. Bids may be modified or withdrawn by written or telegraphic notice, provided such notice is received prior to the hour and date specified for receipt (see paragraph 9 of these instructions).

c. Samples of items, when required, must be submitted within the time specified, unless otherwise specified by the University, at no expense to the University. If not destroyed by testing, sampleswill be returned at bidder's request and expense, unless otherwise specified by the Solicitation.

d. Samples or descriptive literature should not be submitted unless it is required on this Solicitation. Regardless of any attempt by a bidder to condition the bid, unsolicited samples or descriptive literature will not be examined or tested at the bidder's risk, and will not be deemed to vary any ofthe provisions of this Solicitation.

14. FAILURE TO SUBMIT BID: If no bid is to be submitted, do not return the Solicitation unless otherwise specified. A letter or postcard shall be sent to the issuing office advising whether future Solicitations for the type of supplies or services covered by this Solicitation is desired.

15. PRE-BID CONFERENCES. Pre-Bid conferences will be permitted any time prior to the date establishedherein for submission of bid. The conferences will be conducted only to explain the procurement requirements for this Request for Proposal. The Authority will notify all Bidders of any substantive clarification provided in response to any inquiry. The Authority will extend the due date if such information significantly amends the solicitation or makes compliance with the original proposed due date impractical.

16. BID PACKET. The prospective bidder is required to read each and every page of the Bid Packet and bythe act of submitting a proposal shall be deemed to have accepted all conditions contained therein. In no case will failure to inspect constitute grounds for claim or for the withdrawal of a bid after opening. Bid submission shall be sent electronically. Erasures or other changes in a bid must be explained or noted over the signature of the offeror. Bid submission containing any conditions, omissions, unexplained erasure or alterations or items not called for in the Bid packet, or irregularities of any kind may be rejected by the University as being incomplete.

17. BID PACKET FORM. A non-refundable fee of **$25.00 (U.S.)** shall be charged for each hard copy or CD ROM bid packet. All payments shall be made by cash, certified check or money order to the University of Guam. Cashier services are located at the UOG Administration Building Mon-Fri from 8am-4pm by appointment only. Payby phone is also available from 8am-4pm at 735-2923/45/46.

18. NOTICE OF AWARD. UOG will notify all bidders the status of the Bid and Notice of Award. Written notice of award will be public information and made a part of the contract file.

19. LOCAL PROCUREMENT PREFERENCE: "All procurement of supplies and services shall be made from among businesses licensed to do business on Guam in accordance with Guam Code Annotated Title 5 Chapter 5 Section 5008 and Section 3.9.14.5, UOG Procurement Regulation."

20. BIODEGRADABLE, REUSEABLE, RECYCLABLE MATERIALS: Section 1.5, UOG Procurement Regulations. UOG's President or his designee, whenever possible, shall procure products that are biodegradable, reusable, recyclable, or made of recycled material, or any of these in any combination. The cost (prior to any adjustments for local vendors) of appropriate biodegradable, reusable, recyclable, or recycled products may be as much as ten percent (10%) greater than the cost of the non-biodegradable, non-reusable, non-recyclable, or non- recycled products they are replacing.

21. SERVICE-DISABLED VETERAN PREFERENCE: UOG will award the contract for this solicitation to bidders that are business concerns that are at least fifty-one-percent (51%) owned by a service-disabled veteran(s) who served in the active U.S. military: (1) Who was discharged or released under honorable conditions and whose disability is service-connected as demonstrated by a DD Form 214, and certified by an award letter from the U.S. Department of Veterans Affairs; (2) That submitted the DD Form 214 and Disability award letter from the U.S. Department of Veterans Affairs with their bid submitted in response to this solicitation; (3) The service-disabled veteran(s) owner of the business concern has filed individual tax returns on Guam for a period of at least three (3) consecutive years; (4) The business concern is licensed to do business on Guam; (5) The business concern maintains its headquarters on Guam; (6) the supply or service offered by the business concern is available within the period required by UOG; and (7) The price for the supply or service does not exceed one-hundred-five-percent (105%) of the lowest price bidder. The Service-Disabled Veteran Preference is given in addition to any other procurement benefit the service-disabled veteran owned business may qualify for under Guam law.

22. WOMEN OWNED BUSINESS PREFERENCE: UOG will award the contract for this solicitation to bidders that are business concerns that are at least fifty-one-percent (51%) owned by women, who manage day-to-day operations and make long-term decisions, and: (1) The owner(s) of the business concern has filed individual tax returns on Guam for a period of at least three (3) consecutive years; (2) The business concern is licensed to do business on Guam; (3) The business concern maintains its headquarters on Guam; (4) the supply or service offered by the business concern is available within the period required by UOG; (5) The business concern is certified as a Women-Owned Small business (WOSB) or an Economically Disadvantaged Women-Owned Small Business (EDWOSB) by the U.S. Small Business Administration; and (6) The price for the supply or service does not exceed one-hundred-five-percent (105%) of the lowest price bidder. The Women Owned Business Preference is given in addition to any other procurement benefit the women owned business may qualify for under Guam law.

23. DETERMINING LOWEST PRICE IF BIDDERS CLAIM PREFERENCES. In accordance with 5 G.C.A. §5013(a), UOG shall determine the lowest price in the case of more than one (1) women-owned business, or a women-owned business and a service-disabled veteran owned business, who are competing for the same government contract.

24. MULTIPLE OR ALTERNATIVE BIDS. UOG shall not accept any multiple or alternative bid and shall reject any multiple or alternate bids its received. However, if a bidder clearly indicates a base bid, such base bid shall be considered for award as though it were the only bid submitted by the bidder. If UOG is not able to distinguish which bid is the base bid, it will reject all the multiple or alternative bids submitted by the bidder.

25. MULTI-TERM CONTRACT. If a multi-term contract is awarded for this solicitation, the amount of supplies or services stated on the bid price form of this solicitation shall be the amount of supplies or services required for the proposed contract period and the unit prices given by the bidder awarded the contract shall be the same throughout the multi-term contract period, except to the extent that price adjustments may be provided in this solicitation and the resulting contract, and UOG may cancel, after giving timely notice to the contractor, the multi-term contract if funds are not appropriated or otherwise made available to support continuation of performance in any fiscal period succeeding the first. However, this will not effect either UOG's rights or the contractor's rights under any termination clause in the contract. If the contract is canceled, the contractor will be reimbursed the unamortized, reasonably incurred, nonrecurring costs.

ATTACHMENT A

GENERAL TERMS AND CONDITIONS FOR THE INVITATION FOR BIDS

1. COMPLIANCE WITH SPECIFICATIONS: Bidder should comply with specifications outlined.

2. LATE BIDS, LATE WITHDRAWALS, AND LATE MODIFICATIONS:

Any bid received after the time and date set for receipt of bids is late. Any withdrawal or modification of abid received after the time and date set for opening of bids at the place designated for opening is late. (Section 3.9.11.1, University of Guam Procurement Manual).

3. DETERMINATION OF LOWEST RESPONSIBLE BIDDERS: In determining lowest responsible bidder,the University shall be guided by the following:

(a) Price of bid items.

(b) The ability, capacity, and skill of the bidder to perform.

(c) Whether the bidder can perform promptly or within the specified time.

(d) The character, integrity, reputation, judgment, experience, and efficiency of the bidder.

(e) The quality of performance of the bidder with regards to awards previously made to him.

(f) The previous and existing compliance by the bidder with laws and regulations relative toprocurement.

(g) The sufficiency of the financial resources and ability of the bidder to perform.

(h) The quality, availability, and adaptability of the supplies for the use of the subject of the award.

(i) The ability of the bidder to provide future maintenance and services for the use of the subject of theaward.

(j) The number and scope of the conditions attached to the bid.

4. LOW TIE BIDS: Low tie bids are low responsive bids from responsible bidders that are identical in price and which meet all the requirements and criteria set forth in the Invitation for Bids. Award shall not bemade by drawing lots, except as set forth UOG Procurement Regulations Section 3.9.15, or by dividing business among identical bidders.

5. TAXES: Bidders are cautioned that they are subject to Guam Business Privilege Taxes, including 4% Gross Receipt Tax and Guam Income Taxes on Guam Transactions. Specific information of taxes may beobtained from the Director of Revenue and Taxation.

6. LICENSING: Bidders are cautioned that the University will not consider for award any Bid Offer submitted by a bidder who has not complied with Guam Licensing Law. Specific information on licensesmay be obtained from the Director of Revenue and Taxation.

7. EQUAL EMPLOYMENT OPPORTUNITY: Section 3.01(1) of the President Executive Order No. 10935dated March 7, 1965, requires the bidder not to discriminate against any employee or applicant for employment because of race, creed, color or national origin. The bidder will take affirmative action to

ensure that applicants are employed and the employees are treated equally during employment withoutregard to their race, creed, color or national origin.

8. DETERMINATION OF RESPONSIBILITY OF BIDDER: The University reserves the right for securing from bidders information necessary to determine whether or not they are responsible and to determine the responsibility in accordance with Section 3 of the General Terms and Conditions.

9. JUSTIFICATION OF DELAY: Vendors who are awarded items under the Bid guarantee that the goodswill be delivered to their destination within the time specified. If the vendor is not able to meet the specified delivery date, he is required to notify the purchasing agent of such delay. Notification shall be in writing andshould be received by the agent at least twenty-four (24) hours before the specified delivery date. Notification of delay shall include an explanation of the causes and reasons for the delay including statement(s) from supplier or shipping company causing the delay. The University of Guam reserves the right to reject delay justification if in the opinion of the President such justification is not adequate.

10. EQUAL OPPORTUNITY EMPLOYER AND PROVIDER: It is the policy of the University of Guam to provide equal opportunity in its higher educational mission and as employer. The University complies with all federal and local statutes, rules and regulations which prohibit discrimination in its policies and practicesand direct affirmative action , including but not limited to Titles VII and IX of the Civil Rights Act of 1964 (asamended), Executive Order 11246, and the Equal Pay act of 1963 (as amended). The University shall promote a full realization of equal opportunity through a positive, continuing program, including a requirement that those doing business with the University also are equal opportunity employers.

11. EMPLOYMENT RESTRICTION: If a contract for services is awarded to the bidder or offeror, then the service provider must warrant that no person in its employment who has been convicted of a sex offense under the provisions of Chapter 25 of Title 9 of the Guam Code Annotated or of an offense defined in Article 2 of Chapter 28 of Title 9 of the Guam Code Annotated, or who has been convicted in any other jurisdiction of an offense with the same elements as heretofore define, or who is listed on the Sex Offender Registry, shall provide services on behalf of the service provider while on University of Guam property, with the exception of public highways. If any employee of a service provider is providing services on University property and is convicted subsequent to an award of a contract, then the service provider warrants that it will notify the University of the Conviction, within twenty-four hours of the conviction, and will immediately remove such convicted person from providing services on University property. If the service provider is found to be in violation of any of the provisions of this paragraph, then the University will give notice to the service provider to take corrective action. The service provider shall take corrective action within twenty-four hours of notice from the University, and the service provider shall notify the University when action has been taken. If the service provider fails to take corrective steps within twenty-four hours ofnotice from the University, then the University in its sole discretion may suspend temporarily any contract for services until corrective action has been taken.

12. (X) (Required if checked) BID SECURITY REQUIREMENT (Attachment D): Bidder is required to submit a Bid Security or standby irrevocable Letter of Credit or Certified Check or Cashier's Check or othersecurity supplied in a form satisfactory to the University in the same bid envelope to be held by the University of Guam (UOG). A bidder should contact the University for Pre-approval of the bid security requirement before the deadline for submission of bid packages if it is proposing security in a form not specifically listed above. The bid security required under any applicable invitation for Bid shall not be released upon award of the bid, but instead shall continue in full force and effect until delivery of the supplies or services required by any contract awarded to contractor under the associated Invitation for Bid

is completed. The Bid Security, Letter of Credit, Certified Check or Cashier's Check must be issued by anylocal surety or banking institution licensed to do business on Guam and made payable to the University of Guam in the amount of fifteen percent (15%) of the total amount bid. The Original Bid Security must be submitted to the UOG Procurement office on or before bid submission deadline. Personal Checks will not be accepted as Bid Security.

If a successful Bidder (contractor) withdraws from the bid or fails to enter into contract within the prescribedtime, such Bid guarantee will be forfeited to the University of Guam. Bids will be disqualified if not accompanied by Bid Security, Letter of Credit, Certified Check or Cashier's Check. Bidder must include in his/her bid, valid copies of a Power of Attorney from the Surety and a Certificate of Authority from the Government of Guam to show proof that the surety company named on the bond instrument is authorized by the Government of Guam and qualified to do business on Guam. For detailed information on bonding matters, contact the Department of Revenue and Taxation. Failure to submit a valid Power of Attorney andCertificate of Authority on the surety is cause for rejection of bid. (Pursuant to Public Law 27-127, all competitive sealed bidding for the procurement of supplies or services, exceeding $25,000.00, a 15% Bid Security of the total bid price must accompany the bid package.) When the Invitation for Bids requires bid security, non-compliance requires that the bid be rejected unless, pursuant to Policy Office regulations, it isdetermined that the bid fails to comply in a non-substantial manner with the security requirements.

13. INDEPENDENT CONTRACTOR: Contractor shall operate its business as an independent contractorand shall discharge all of its duties as such. No act performed or representation made, whether oral or written by Contractor with respect to third parties shall be binding on UOG.

14. INDEMNITY: Contractor agrees to indemnify and hold harmless UOG and its officers and employeesfrom any claim, damage, liability, injury, expense or loss, including defense costs and attorney's fees, arising out of Contractor's duties under this agreement resulting from Contractor's negligence, save and except those caused by the negligence on the part of UOG.

ATTACHMENT B

SPECIAL GENERAL PROVISIONS

1. GENERAL INTENTION: It is the declared and acknowledged intention and meaning of this Special General Provision for the Bidder to provide the University of Guam with materials, supplies, or equipmentcompletely assembled, and ready for use.

2. COMPETENCY OF BIDDERS: Bids will be considered only from such bidders who, in the opinion ofthe University, can show evidence of their ability, experience, and facilities to render satisfactory service.

3. CONTACT FOR CONTRACT ADMINISTRATION: If your firm receives a contract as a result of thisinvitation, please designate a person whom we may contact for prompt administration.

NAME:_____TITLE:_____

NAME OF COMPANY:_____ADDRESS: _____

TEL:_____FAX:_____ E-Mail Address: _____

4. INSPECTION: All supplies, materials, or equipment delivered under this contract shall be subject to the inspection and test conducted by the University at destination. If, in any case, the supplies, materials, orequipment are found to be defective in material, workmanship, performance or otherwise does not conform to the specifications, the University shall have the right to reject the items or require that they be corrected. The number of days required for correction will be determined by the University of Guam.

6. BID ELECTRONIC FILE: Bid file shall be marked with the bidder's name, bid invitation number, andbid title.

NOTE: UNDER NO CIRCUMSTANCES WILL LATE BIDS BE ACCEPTED BY THIS OFFICE.

7. RECEIPT, OPENING AND RECORDING OF BIDS: Bids and modifications shall be publicly opened inthe presence of one or more witnesses, at the time, date, and place designated in the Invitation for Bid. The name of each bidder, the bid price, and such other information as is deemed appropriate by the Procurement Officer, shall be read aloud and recorded, or otherwise made available. The names and addresses of required witnesses shall be recorded at the opening. The opened bids shall be available for public inspection except to the extent the bidder designates trade secrets or other proprietary data to be confidential as set forth in accordance with Section 8, below. Materials so designated shall accompany the bid and shall be readily separable from the bid in order to facilitate public inspection of the non-confidential portion of the bid. Prices, makes and models or catalogue numbers of the items offered, deliveries, and terms of payment shall be publicly available at the time of bid opening regardless of any designation to the contrary.

8. CONFIDENTIAL DATA: The Procurement Officer shall examine the bids to determine the validity of any requests for nondisclosure of trade secrets and other proprietary data identified in writing. If the parties do not agree as to the disclosure of data, the Procurement Officer shall inform the bidders in writing what portions of the bid will be disclosed and that, unless the bidders protest under Chapter 9 of UOG Procurement Regulations, the bids will be so disclosed. The bids shall be opened to public inspection subject to any continuing prohibition on the disclosure of confidential data.

9. INQUIRIES: All inquiries or questions and concerns must be submitted to the President of theUniversity of Guam in writing through the procurement office at uog.bids@triton.uog.edu. Oral communications will not be considered.

ATTACHMENT C

BIDDER'S QUALIFICATIONS

To be submitted in accordance with the provisions set forth in the INSTRUCTIONS TO BIDDERS contained in the bidding documents for the project.

The undersigned Bidder makes the following representations relating to its proposal to the UNIVERSITY OF GUAM.

The word "it", used herein by way of reference to the undersigned, shall be deemed to mean "he or she" ifthe Bidder is an individual and "they" if the Bidder is a partnership

1. It maintains a permanent place of business at

_____

_____

2. STANDARD FOR DETERMINATION OF QUALIFIED BIDDER: In order to qualify as responsible, aprospective bidder must meet the following standards as they relate to the particular procurement underconsideration:

(a) Has adequate financial resources for performance, or has the ability to obtain such resources asrequired during performance.

(b) Has the necessary experience, organization, technical qualifications, skills, and facilities, or has theability to obtain them.

(c) Is able to comply with the proposed or required performance schedule.

(d) Has a satisfactory record of integrity, judgment, and performance.

(e) Must be able to conform to the requirements of the Equal Employment Opportunity Act.

3. It hereby represents and warrants that all statements set forth herein are true and correct. (If the Bidderis a partnership, the partnership name must be signed, followed by the signature of at least one of the partners. If the Bidder is a corporation, the corporate name must be signed, followed by the signature of a duly authorized officer and the corporate seal affixed. A typewritten copy of all such names and signatures shall be appended. No alterations, erasures, corrections or interlineations will be permitted).

_____

NAME OF BIDDER

ATTACHMENT D
BID SECURITY

BID BOND
NO. B21-17

KNOW ALL MEN BY THESE PRESENTS that _____, as Principal, hereinafter called the "Principal", and (Bonding Company), _____, a duly admitted insurer under the laws of the Territory of Guam, as Surety, hereinafter called the "Surety", are held firmly bound unto the University of Guam for the sum of_____Dollars ($_____), for payment of which sum will and truly to be made, the said Principal and the said Surety bind ourselves, our heirs, executors, administrators, successors and assigns, jointly and severally, firmly by these presents.

Whereas, the Principal has submitted a bid for (identify project by number and brief description)
_____
_____.

NOW, THEREFORE, if the University of Guam shall accept the bid of the Principal, the Principal shall enter into a Contract with the University of Guam in accordance with the terms of such bid, and give such bond orbonds as may be specified in bidding or Contract Documents with good and sufficient surety for the faithful performance of such Contract and for the prompt payment of labor and material furnished in the prosecution thereof. In the event of the failure of the Principal to enter such Contract and give such bond or bonds, if thePrincipal shall pay to the University of Guam the difference not to exceed the penalty hereof between the amounts specified in said bid and such larger amount for which the University of Guam may in good faith contract with another party to perform work covered by said bid or an appropriate liquidated amount as specified in the Invitation for Bid, then this obligation shall be null and void, but otherwise will remain in full force and effect.

Signed and sealed this_____day of_____, 20_____

_____
(PRINCIPAL) (SEAL)

_____
(WITNESS)

_____
(TITLE)

_____
(MAJOR OFFICER OF SURETY)

_____
(TITLE)

_____
(MAJOR OFFICER OF SURETY)

_____
(TITLE)

_____
(RESIDENT GENERAL AGENT)

ATTACHMENT E
MAJOR SHAREHOLDER DISCLOSURE AFFIDAVIT

CITY OF_____)
) ss.
ISLAND OF GUAM)

A. I, the undersigned, being first duly sworn depose and say that I am an authorized representative of the offerorand that (please check only one):

( ) The offeror is an individual or sole proprietor and owns the entire (100%) interest in the offering

business.( ) The offeror is a corporation, partnership, joint venture, or association known as _____ (please state name of offeror company), and the persons, companies, partners, or joint ventures who have held more than 10% of the shares or interest in the offering business during the 365 days immediately preceding the submission date of the proposal are as follows (if none, please so state):

NAME	ADDRESS	% of Interest

B. Further, I say that the persons who have received or are entitled to receive a commission, gratuity or other compensation for procuring or assisting in obtaining business related to the bid or proposal for which affidavitis submitted are as follows (if none, please so state):

NAME	ADDRESS	Compensation

C. If the ownership of the offering business should change between the time this affidavit is made and the time an award is made or a contract is entered into, then I promise personally to update the disclosure required by5 GCA § 5233 by delivering another affidavit to the government.

_____
Signature of one of the following: Offeror, if the offeror is an individual; Partner, if the offeror is a partnership;Officer, if the offeror is a corporation

Subscribed and sworn to before

me This____day of_____, 20_

_____

NOTARY PUBLIC
My commission expires_____, _____
(AG Procurement Form 002 (Rev. Nov 17, 2005)

ATTACHMENT F

AFFIDAVIT re NON-COLLUSION

CITY OF_____)
) ss.
ISLAND OF GUAM)

_____ (state name of affiant singing below), being first dulysworn deposes and says that:

1. The name of the offering company or individual is (state name of company) _____

2. The proposal for the solicitation identified above is genuine and not collusive or a sham. The offeror has not colluded, conspired, connived or agreed, directly or indirectly, with any other offeror or person, to put in a sham proposal or to refrain from making an offer. The offeror has not in any manner, directly or indirectly, sought by an agreement or collusion, or communication or conference, with any person to fix the proposal price of offeror or of any other offeror, or to fix any overhead, profit or cost element of said proposal price, or of that of any other offeror, or to secure any advantage against the government of Guam or any person interested in the proposed contract. All statements in this affidavit and in the proposal are true to the best of the knowledge of the undersigned. This statement is made pursuant to 2 GAR Division 4 § 3126(b).

3. I make this statement on behalf of myself as a representative of the offeror, and on behalf of the offeror's officers, representatives, agents, subcontractors, and employees.

_____
Signature of one of the following:
Offeror, if the offeror is an individual;
Partner, if the offeror is a partnership;Officer, if the offeror is a corporation

Subscribed and sworn to before me

This_____day of_____, 20_

_____
NOTARY PUBLIC
My commission expires_____, _____
(AG Procurement Form 003 (Jul. 12, 2010)

ATTACHMENT G
AFFIDAVIT re GRATUITIES, KICKBACKS AND FAVORS

CITY OF_____)
) ss.
ISLAND OF GUAM)

_____ (state name of affiant signing below), being first duly sworn,deposes and says that:

1. The name of the offering firm or individual is (state name of offeror company) _____= Affiant is_____(state one of the following: the offeror, a partner of the offeror, and officer of the offeror) making the foregoing identified bid or proposal.
2. To the best of affiant's knowledge, neither affiant, nor any of the offeror's officers, representatives, agents subcontractors, or employees have violated, are violating the prohibition against gratuities, kickbacks and favors set forth in UOG Procurement Manual Section 11.7 Further, affiant promises, on behalf of offeror, not to violate the prohibition against gratuities, kickbacks and favors as set forth in UOG Procurement Manual Section 11.7.
3. To the best of affiant's knowledge, neither affiant, nor any of the offeror's officers, representatives, agents, subcontractors, or employees have offered, given or agreed to give, any government of Guam employee or former government employee, any payment, gift, kickback, gratuity or offer of employment in connection with the offeror's proposal.
4. I make this statement on behalf of myself as a representative of the offeror, and on behalf of the offeror's officers, representatives, agents, subcontractors, and employees.

_____
Signature of one of the following:
Offeror, if the offeror is an individual;
Partner, if the offeror is a partnership;Officer, if the offeror is a corporation

Subscribed and sworn to before me

This_____day of_____, 20_

~~NOTARY PUBLIC~~ _____
My commission expires_____, _____
(AG Procurement Form 004 (Jul. 12, 2010)

ATTACHMENT H
AFFIDAVIT RE ETHICAL STANDARDS

CITY OF_____)
) ss.
ISLAND OF GUAM)

_____ (state name of affiant signing below), being first duly sworn, deposes and says that:

The affiant is_____(state one of the following: the offeror, a partner of the offeror, an officer of the offeror) making the foregoing identified bid or proposal. To the best of affiant's knowledge, neither affiant nor any officers, representatives, agents, subcontractors or employees of offeror have knowingly influenced any government of Guam employee to breach any of the ethical standards set forth in 5 GCA Chapter 5, Article 11. Further, affiant promises that neither he or she, nor any officer, reprehensive, agent, subcontractor, or employee of offeror will knowingly influence any government of Guam employee to breach any ethical standards set forth in 5 GCA Chapter 5, Article 11. These statements are made pursuant to UOG Procurement Manual Section 11.3.3.

_____
Signature of one of the following:
Offeror, if the offeror is an individual;
Partner, if the offeror a partnership;
Officer, if the offeror is a corporation.

Subscribed and sworn to before me

This_____day of_____, 20_

_____
NOTARY PUBLIC

My commission expires_____,_____.

(AG Procurement Form 005 (Jul. 12, 2010)

ATTACHMENT I

DECLARATION re COMPLIANCE WITH U.S. DOL WAGE DETERMINATIONS

Procurement No.: UOG BID B21-17

Name of Offeror Company: _____

I,_____hereby certify under penalty of perjury:

(1) That I am_____(please select one: *the offeror, a partner of the offeror, an officer of the offeror)* making the bid or proposal in the foregoing identified procurement;

(2) That I have read and understand the provisions of 5 GCA § 5801and 5802 which read:

§ 5801. Wage Determination Established.

In such cases where the government of Guam enters into contractual arrangements with a sole proprietorship, a partnership or a corporation ("contractor") for the provision of a service to the government of Guam, and in such cases where the contractor employs a person(s) whose purpose, in whole or in part, is the direct delivery of service contracted by the government of Guam, then the contractor shall pay such employee(s) in accordance with the Wage Determination for Guam and the Northern Mariana Islands issued and promulgated by the U.S. Department of Labor for such labor as is employed in the direct delivery of contract deliverables to the government of Guam.

The Wage Determination most recently issued by the U.S. Department of Labor at the time a contract is awarded to a contractor by the government of Guam shall be used to determine wages, which shall be paid to employees pursuant to this Article. Should any contract contain a renewal clause, then at the time of renewal adjustments, there shall be made stipulations contained in the contract for applying the Wage Determination, as required by this Article, so the Wage Determination promulgated by the U.S. Department of Labor on a date most recent to the renewal date shall apply.

§ 5802. Benefits.

In addition to the Wage Determination detailed in this Article, any contract to which this Article applies shall also contain provisions mandating health and similar benefits for employees covered by this Article, such benefits having a minimum value as detailed in the Wage Determination issued and promulgated by the U.S. Department of Labor, and shall contain provisions guaranteeing a minimum of ten (10) paid holidays per annum per employees.

(3) That the offeror is in full compliance with 5 GCA § 5801 and § 5802, as may be applicable to theprocurement referenced herein;

(4) That I have attached the most recent wage determination applicable to Guam issued by the U.S.Department of Labor. ***(INSTRUCTIONS – Please attach most updated version to bid package)***

(AG Procurement Form 006 (Feb 16, 2010)

_____

Signature

"REGISTER OF WAGE DETERMINATIONS UNDER THE SERVICE CONTRACT ACT
By direction of the Secretary of Labor

U.S. DEPARTMENT OF LABOR
EMPLOYMENT STANDARDS ADMINISTRATION
WAGE AND HOUR DIVISION
WASHINGTON D.C. 20210

Daniel W. Simms
Director

Division of
Wage Determinations

Wage Determination No.: 2015-5693
Revision No.: 13
Date Of Last Revision: 08/04/2021

Note: Under Executive Order (EO) 13658 an hourly minimum wage of $10.95 for calendar year 2021 applies to all contracts subject to the Service Contract Act for which the contract is awarded (and any solicitation was issued) on or after January 1 2015. If this contract is covered by the EO the contractor must pay all workers in any classification listed on this wage determination at least $10.95 per hour (or the applicable wage rate listed on this wage determination if it is higher) for all hours spent performing on the contract in calendar year 2021. The EO minimum wage rate will be adjusted annually. Additional information on contractor requirements and worker protections under the EO is available at www.dol.gov/whd/govcontracts.

States: Guam Northern Marianas Wake Island

Area: Guam Statewide

Northern Marianas Statewide

Wake Island Statewide

Fringe Benefits Required Follow the Occupational Listing

OCCUPATION CODE - TITLE	FOOTNOTE	RATE
01000 - Administrative Support And Clerical Occupations		
01011 - Accounting Clerk I		13.57
01012 - Accounting Clerk II		15.23
01013 - Accounting Clerk III		17.04
01020 - Administrative Assistant		21.43
01035 - Court Reporter		17.40
01041 - Customer Service Representative I		11.51
01042 - Customer Service Representative II		12.94
01043 - Customer Service Representative III		14.12
01051 - Data Entry Operator I		12.15
01052 - Data Entry Operator II		13.25
01060 - Dispatcher Motor Vehicle		17.39
01070 - Document Preparation Clerk		13.85
01090 - Duplicating Machine Operator		13.85
01111 - General Clerk I		10.35
01112 - General Clerk II		11.29
01113 - General Clerk III		12.68
01120 - Housing Referral Assistant		19.39
01141 - Messenger Courier		11.37
01191 - Order Clerk I		12.57
01192 - Order Clerk II		13.71
01261 - Personnel Assistant (Employment) I		15.95
01262 - Personnel Assistant (Employment) II		17.85
01263 - Personnel Assistant (Employment) III		19.89
01270 - Production Control Clerk		21.78
01290 - Rental Clerk		11.10

01300 - Scheduler Maintenance	15.55
01311 - Secretary I	15.55
01312 - Secretary II	17.40
01313 - Secretary III	19.39
01320 - Service Order Dispatcher	15.40
01410 - Supply Technician	21.43
01420 - Survey Worker	16.96
01460 - Switchboard Operator/Receptionist	10.36
01531 - Travel Clerk I	13.01
01532 - Travel Clerk II	14.12
01533 - Travel Clerk III	15.09
01611 - Word Processor I	14.53
01612 - Word Processor II	16.31
01613 - Word Processor III	18.26
05000 - Automotive Service Occupations	
05005 - Automobile Body Repairer Fiberglass	15.46
05010 - Automotive Electrician	14.52
05040 - Automotive Glass Installer	13.58
05070 - Automotive Worker	13.58
05110 - Mobile Equipment Servicer	11.65
05130 - Motor Equipment Metal Mechanic	15.46
05160 - Motor Equipment Metal Worker	13.58
05190 - Motor Vehicle Mechanic	15.46
05220 - Motor Vehicle Mechanic Helper	10.66
05250 - Motor Vehicle Upholstery Worker	12.64
05280 - Motor Vehicle Wrecker	13.58
05310 - Painter Automotive	14.52
05340 - Radiator Repair Specialist	13.58
05370 - Tire Repairer	12.67
05400 - Transmission Repair Specialist	15.46
07000 - Food Preparation And Service Occupations	
07010 - Baker	10.47
07041 - Cook I	13.26
07042 - Cook II	15.46
07070 - Dishwasher	9.31
07130 - Food Service Worker	9.45
07210 - Meat Cutter	12.13
07260 - Waiter/Waitress	9.27
09000 - Furniture Maintenance And Repair Occupations	
09010 - Electrostatic Spray Painter	18.04
09040 - Furniture Handler	10.95
09080 - Furniture Refinisher	18.04
09090 - Furniture Refinisher Helper	13.27
09110 - Furniture Repairer Minor	15.70
09130 - Upholsterer	18.04
11000 - General Services And Support Occupations	
11030 - Cleaner Vehicles	9.35
11060 - Elevator Operator	9.54
11090 - Gardener	13.00
11122 - Housekeeping Aide	9.54
11150 - Janitor	9.54
11210 - Laborer Grounds Maintenance	9.82
11240 - Maid or Houseman	9.32
11260 - Pruner	8.79
11270 - Tractor Operator	11.90
11330 - Trail Maintenance Worker	9.82
11360 - Window Cleaner	10.66
12000 - Health Occupations	
12010 - Ambulance Driver	18.23
12011 - Breath Alcohol Technician	18.23
12012 - Certified Occupational Therapist Assistant	25.01
12015 - Certified Physical Therapist Assistant	25.01
12020 - Dental Assistant	16.32
12025 - Dental Hygienist	36.12
12030 - EKG Technician	25.99

12035 - Electroneurodiagnostic Technologist		25.99
12040 - Emergency Medical Technician		18.23
12071 - Licensed Practical Nurse I		16.30
12072 - Licensed Practical Nurse II		18.23
12073 - Licensed Practical Nurse III		20.32
12100 - Medical Assistant		12.26
12130 - Medical Laboratory Technician		18.82
12160 - Medical Record Clerk		13.61
12190 - Medical Record Technician		17.77
12195 - Medical Transcriptionist		16.30
12210 - Nuclear Medicine Technologist		40.06
12221 - Nursing Assistant I		11.34
12222 - Nursing Assistant II		12.75
12223 - Nursing Assistant III		13.91
12224 - Nursing Assistant IV		15.61
12235 - Optical Dispenser		18.23
12236 - Optical Technician		16.30
12250 - Pharmacy Technician		15.49
12280 - Phlebotomist		16.30
12305 - Radiologic Technologist		25.33
12311 - Registered Nurse I		23.18
12312 - Registered Nurse II		28.36
12313 - Registered Nurse II Specialist		28.36
12314 - Registered Nurse III		34.32
12315 - Registered Nurse III Anesthetist		34.32
12316 - Registered Nurse IV		41.13
12317 - Scheduler (Drug and Alcohol Testing)		22.58
12320 - Substance Abuse Treatment Counselor		22.58
13000 - Information And Arts Occupations		
13011 - Exhibits Specialist I		21.20
13012 - Exhibits Specialist II		26.27
13013 - Exhibits Specialist III		32.13
13041 - Illustrator I		21.20
13042 - Illustrator II		26.27
13043 - Illustrator III		32.13
13047 - Librarian		29.09
13050 - Library Aide/Clerk		16.88
13054 - Library Information Technology Systems Administrator		26.27
13058 - Library Technician		16.64
13061 - Media Specialist I		18.96
13062 - Media Specialist II		21.20
13063 - Media Specialist III		23.63
13071 - Photographer I		18.96
13072 - Photographer II		21.20
13073 - Photographer III		26.27
13074 - Photographer IV		32.13
13075 - Photographer V		38.88
13090 - Technical Order Library Clerk		21.20
13110 - Video Teleconference Technician		18.96
14000 - Information Technology Occupations		
14041 - Computer Operator I		15.71
14042 - Computer Operator II		17.22
14043 - Computer Operator III		19.19
14044 - Computer Operator IV		21.33
14045 - Computer Operator V		23.62
14071 - Computer Programmer I	(see 1)	15.73
14072 - Computer Programmer II	(see 1)	19.50
14073 - Computer Programmer III	(see 1)	23.84
14074 - Computer Programmer IV	(see 1)	
14101 - Computer Systems Analyst I	(see 1)	24.23
14102 - Computer Systems Analyst II	(see 1)	
14103 - Computer Systems Analyst III	(see 1)	
14150 - Peripheral Equipment Operator		15.71
14160 - Personal Computer Support Technician		21.33

14170 - System Support Specialist	21.24
15000 - Instructional Occupations	
15010 - Aircrew Training Devices Instructor (Non-Rated)	24.23
15020 - Aircrew Training Devices Instructor (Rated)	29.32
15030 - Air Crew Training Devices Instructor (Pilot)	34.91
15050 - Computer Based Training Specialist / Instructor	24.23
15060 - Educational Technologist	27.61
15070 - Flight Instructor (Pilot)	34.91
15080 - Graphic Artist	20.47
15085 - Maintenance Test Pilot Fixed Jet/Prop	34.91
15086 - Maintenance Test Pilot Rotary Wing	34.91
15088 - Non-Maintenance Test/Co-Pilot	34.91
15090 - Technical Instructor	17.67
15095 - Technical Instructor/Course Developer	23.78
15110 - Test Proctor	15.70
15120 - Tutor	15.70
16000 - Laundry Dry-Cleaning Pressing And Related Occupations	
16010 - Assembler	10.12
16030 - Counter Attendant	10.12
16040 - Dry Cleaner	11.56
16070 - Finisher Flatwork Machine	10.12
16090 - Presser Hand	10.12
16110 - Presser Machine Drycleaning	10.12
16130 - Presser Machine Shirts	10.12
16160 - Presser Machine Wearing Apparel Laundry	10.12
16190 - Sewing Machine Operator	12.04
16220 - Tailor	12.52
16250 - Washer Machine	10.60
19000 - Machine Tool Operation And Repair Occupations	
19010 - Machine-Tool Operator (Tool Room)	19.46
19040 - Tool And Die Maker	24.46
21000 - Materials Handling And Packing Occupations	
21020 - Forklift Operator	13.96
21030 - Material Coordinator	21.78
21040 - Material Expediter	21.78
21050 - Material Handling Laborer	11.37
21071 - Order Filler	9.76
21080 - Production Line Worker (Food Processing)	13.96
21110 - Shipping Packer	17.12
21130 - Shipping/Receiving Clerk	17.12
21140 - Store Worker I	15.22
21150 - Stock Clerk	21.40
21210 - Tools And Parts Attendant	13.96
21410 - Warehouse Specialist	13.96
23000 - Mechanics And Maintenance And Repair Occupations	
23010 - Aerospace Structural Welder	25.04
23019 - Aircraft Logs and Records Technician	19.47
23021 - Aircraft Mechanic I	23.84
23022 - Aircraft Mechanic II	25.04
23023 - Aircraft Mechanic III	26.30
23040 - Aircraft Mechanic Helper	16.58
23050 - Aircraft Painter	22.39
23060 - Aircraft Servicer	19.47
23070 - Aircraft Survival Flight Equipment Technician	22.39
23080 - Aircraft Worker	21.03
23091 - Aircrew Life Support Equipment (ALSE) Mechanic I	21.03
23092 - Aircrew Life Support Equipment (ALSE) Mechanic II	23.84
23110 - Appliance Mechanic	19.46
23120 - Bicycle Repairer	15.61
23125 - Cable Splicer	19.59
23130 - Carpenter Maintenance	16.07
23140 - Carpet Layer	18.20
23160 - Electrician Maintenance	18.05

23181 - Electronics Technician Maintenance I 18.20
23182 - Electronics Technician Maintenance II 19.46
23183 - Electronics Technician Maintenance III 20.72
23260 - Fabric Worker 16.94
23290 - Fire Alarm System Mechanic 16.77
23310 - Fire Extinguisher Repairer 15.61
23311 - Fuel Distribution System Mechanic 20.72
23312 - Fuel Distribution System Operator 15.61
23370 - General Maintenance Worker 12.01
23380 - Ground Support Equipment Mechanic 23.84
23381 - Ground Support Equipment Servicer 19.47
23382 - Ground Support Equipment Worker 21.03
23391 - Gunsmith I 15.61
23392 - Gunsmith II 18.20
23393 - Gunsmith III 20.72
23410 - Heating Ventilation And Air-Conditioning Mechanic 17.50
23411 - Heating Ventilation And Air Contidioning Mechanic (Research Facility) 18.61
23430 - Heavy Equipment Mechanic 19.27
23440 - Heavy Equipment Operator 17.76
23460 - Instrument Mechanic 20.72
23465 - Laboratory/Shelter Mechanic 19.46
23470 - Laborer 11.37
23510 - Locksmith 19.46
23530 - Machinery Maintenance Mechanic 23.13
23550 - Machinist Maintenance 20.72
23580 - Maintenance Trades Helper 10.67
23591 - Metrology Technician I 20.72
23592 - Metrology Technician II 22.03
23593 - Metrology Technician III 23.33
23640 - Millwright 20.72
23710 - Office Appliance Repairer 19.46
23760 - Painter Maintenance 14.08
23790 - Pipefitter Maintenance 18.39
23810 - Plumber Maintenance 17.27
23820 - Pneudraulic Systems Mechanic 20.72
23850 - Rigger 20.72
23870 - Scale Mechanic 18.20
23890 - Sheet-Metal Worker Maintenance 17.35
23910 - Small Engine Mechanic 18.20
23931 - Telecommunications Mechanic I 19.76
23932 - Telecommunications Mechanic II 21.01
23950 - Telephone Lineman 18.24
23960 - Welder Combination Maintenance 18.31
23965 - Well Driller 21.13
23970 - Woodcraft Worker 20.71
23980 - Woodworker 15.61
24000 - Personal Needs Occupations
24550 - Case Manager 15.01
24570 - Child Care Attendant 10.09
24580 - Child Care Center Clerk 13.25
24610 - Chore Aide 12.78
24620 - Family Readiness And Support Services Coordinator 15.01
24630 - Homemaker 16.12
25000 - Plant And System Operations Occupations
25010 - Boiler Tender 20.72
25040 - Sewage Plant Operator 21.59
25070 - Stationary Engineer 20.72
25190 - Ventilation Equipment Tender 14.29
25210 - Water Treatment Plant Operator 21.59
27000 - Protective Service Occupations
27004 - Alarm Monitor 10.90
27007 - Baggage Inspector 9.48

27008 - Corrections Officer	12.05
27010 - Court Security Officer	12.05
27030 - Detection Dog Handler	10.90
27040 - Detention Officer	12.05
27070 - Firefighter	12.05
27101 - Guard I	9.48
27102 - Guard II	10.90
27131 - Police Officer I	12.05
27132 - Police Officer II	13.40
28000 - Recreation Occupations	
28041 - Carnival Equipment Operator	13.24
28042 - Carnival Equipment Repairer	14.46
28043 - Carnival Worker	9.78
28210 - Gate Attendant/Gate Tender	13.18
28310 - Lifeguard	11.01
28350 - Park Attendant (Aide)	14.74
28510 - Recreation Aide/Health Facility Attendant	11.84
28515 - Recreation Specialist	18.26
28630 - Sports Official	11.74
28690 - Swimming Pool Operator	17.71
29000 - Stevedoring/Longshoremen Occupational Services	
29010 - Blocker And Bracer	25.98
29020 - Hatch Tender	25.98
29030 - Line Handler	25.98
29041 - Stevedore I	24.18
29042 - Stevedore II	27.79
30000 - Technical Occupations	
30010 - Air Traffic Control Specialist Center (HFO) (see 2)	40.29
30011 - Air Traffic Control Specialist Station (HFO) (see 2)	27.78
30012 - Air Traffic Control Specialist Terminal (HFO) (see 2)	30.59
30021 - Archeological Technician I	17.49
30022 - Archeological Technician II	19.56
30023 - Archeological Technician III	24.21
30030 - Cartographic Technician	23.18
30040 - Civil Engineering Technician	23.08
30051 - Cryogenic Technician I	25.57
30052 - Cryogenic Technician II	28.24
30061 - Drafter/CAD Operator I	17.49
30062 - Drafter/CAD Operator II	19.56
30063 - Drafter/CAD Operator III	20.77
30064 - Drafter/CAD Operator IV	25.57
30081 - Engineering Technician I	14.84
30082 - Engineering Technician II	16.66
30083 - Engineering Technician III	18.64
30084 - Engineering Technician IV	23.08
30085 - Engineering Technician V	28.24
30086 - Engineering Technician VI	34.16
30090 - Environmental Technician	23.08
30095 - Evidence Control Specialist	23.08
30210 - Laboratory Technician	20.77
30221 - Latent Fingerprint Technician I	25.57
30222 - Latent Fingerprint Technician II	28.24
30240 - Mathematical Technician	23.34
30361 - Paralegal/Legal Assistant I	19.54
30362 - Paralegal/Legal Assistant II	24.21
30363 - Paralegal/Legal Assistant III	29.61
30364 - Paralegal/Legal Assistant IV	35.83
30375 - Petroleum Supply Specialist	28.24
30390 - Photo-Optics Technician	21.93
30395 - Radiation Control Technician	28.24
30461 - Technical Writer I	23.08
30462 - Technical Writer II	28.24
30463 - Technical Writer III	34.16
30491 - Unexploded Ordnance (UXO) Technician I	25.60
30492 - Unexploded Ordnance (UXO) Technician II	30.98

30493 - Unexploded Ordnance (UXO) Technician III		37.13
30494 - Unexploded (UXO) Safety Escort		25.60
30495 - Unexploded (UXO) Sweep Personnel		25.60
30501 - Weather Forecaster I		25.57
30502 - Weather Forecaster II		31.09
30620 - Weather Observer Combined Upper Air Or Surface Programs	(see 2)	20.77
30621 - Weather Observer Senior	(see 2)	23.08
31000 - Transportation/Mobile Equipment Operation Occupations		
31010 - Airplane Pilot		30.98
31020 - Bus Aide		8.15
31030 - Bus Driver		10.66
31043 - Driver Courier		9.69
31260 - Parking and Lot Attendant		9.91
31290 - Shuttle Bus Driver		11.65
31310 - Taxi Driver		11.41
31361 - Truckdriver Light		10.59
31362 - Truckdriver Medium		11.61
31363 - Truckdriver Heavy		14.64
31364 - Truckdriver Tractor-Trailer		14.64
99000 - Miscellaneous Occupations		
99020 - Cabin Safety Specialist		15.10
99030 - Cashier		9.63
99050 - Desk Clerk		9.70
99095 - Embalmer		25.60
99130 - Flight Follower		25.60
99251 - Laboratory Animal Caretaker I		23.38
99252 - Laboratory Animal Caretaker II		25.54
99260 - Marketing Analyst		21.54
99310 - Mortician		25.60
99410 - Pest Controller		14.61
99510 - Photofinishing Worker		13.45
99710 - Recycling Laborer		17.32
99711 - Recycling Specialist		23.38
99730 - Refuse Collector		16.40
99810 - Sales Clerk		9.87
99820 - School Crossing Guard		17.27
99830 - Survey Party Chief		23.01
99831 - Surveying Aide		13.08
99832 - Surveying Technician		17.00
99840 - Vending Machine Attendant		23.38
99841 - Vending Machine Repairer		29.78
99842 - Vending Machine Repairer Helper		23.38

Note: Executive Order (EO) 13706 Establishing Paid Sick Leave for Federal Contractors applies to all contracts subject to the Service Contract Act for which the contract is awarded (and any solicitation was issued) on or after January 1 2017. If this contract is covered by the EO the contractor must provide employees with 1 hour of paid sick leave for every 30 hours they work up to 56 hours of paid sick leave each year. Employees must be permitted to use paid sick leave for their own illness injury or other health-related needs including preventive care; to assist a family member (or person who is like family to the employee) who is ill injured or has other health-related needs including preventive care; or for reasons resulting from or to assist a family member (or person who is like family to the employee) who is the victim of domestic violence sexual assault or stalking. Additional information on contractor requirements and worker protections

under the EO is available at www.dol.gov/whd/govcontracts.

ALL OCCUPATIONS LISTED ABOVE RECEIVE THE FOLLOWING BENEFITS:

HEALTH & WELFARE: $4.60 per hour up to 40 hours per week or $184.00 per week or $797.33 per month

HEALTH & WELFARE EO 13706: $4.23 per hour up to 40 hours per week or $169.20 per week or $733.20 per month*

*This rate is to be used only when compensating employees for performance on an SCA-covered contract also covered by EO 13706 Establishing Paid Sick Leave for Federal Contractors. A contractor may not receive credit toward its SCA obligations for any paid sick leave provided pursuant to EO 13706.

VACATION: 2 weeks paid vacation after 1 year of service with a contractor or successor; and 4 weeks after 3 years. Length of service includes the whole span of continuous service with the present contractor or successor wherever employed and with the predecessor contractors in the performance of similar work at the same Federal facility. (Reg. 29 CFR 4.173)

HOLIDAYS: A minimum of ten paid holidays per year: New Year's Day Martin Luther King Jr.'s Birthday Washington's Birthday Memorial Day Independence Day Labor Day Columbus Day Veterans' Day Thanksgiving Day and Christmas Day. (A contractor may substitute for any of the named holidays another day off with pay in accordance with a plan communicated to the employees involved.) (See 29 CFR 4.174)

THE OCCUPATIONS WHICH HAVE NUMBERED FOOTNOTES IN PARENTHESES RECEIVE THE FOLLOWING:

1) COMPUTER EMPLOYEES: Under the SCA at section 8(b) this wage determination does not apply to any employee who individually qualifies as a bona fide executive administrative or professional employee as defined in 29 C.F.R. Part 541. Because most Computer System Analysts and Computer Programmers who are compensated at a rate not less than $27.63 (or on a salary or fee basis at a rate not less than $455 per week) an hour would likely qualify as exempt computer professionals (29 C.F.R. 541. 400) wage rates may not be listed on this wage determination for all occupations within those job families. In addition because this wage determination may not list a wage rate for some or all occupations within those job families if the survey data indicates that the prevailing wage rate for the occupation equals or exceeds $27.63 per hour conformances may be necessary for certain nonexempt employees. For example if an individual employee is nonexempt but nevertheless performs duties within the scope of one of the Computer Systems Analyst or Computer Programmer occupations for which this wage determination does not specify an SCA wage rate then the wage rate for that employee must be conformed in accordance with the conformance procedures described in the conformance note included on this wage

determination.

Additionally because job titles vary widely and change quickly in the computer industry job titles are not determinative of the application of the computer professional exemption. Therefore the exemption applies only to computer employees who satisfy the compensation requirements and whose primary duty consists of:

(1) The application of systems analysis techniques and procedures including consulting with users to determine hardware software or system functional specifications;

(2) The design development documentation analysis creation testing or modification of computer systems or programs including prototypes based on and related to user or system design specifications;

(3) The design documentation testing creation or modification of computer programs related to machine operating systems; or

(4) A combination of the aforementioned duties the performance of which requires the same level of skills. (29 C.F.R. 541.400).

2) AIR TRAFFIC CONTROLLERS AND WEATHER OBSERVERS - NIGHT PAY & SUNDAY PAY: If you work at night as part of a regular tour of duty you will earn a night differential and receive an additional 10% of basic pay for any hours worked between 6pm and 6am. If you are a full-time employed (40 hours a week) and Sunday is part of your regularly scheduled workweek you are paid at your rate of basic pay plus a Sunday premium of 25% of your basic rate for each hour of Sunday work which is not overtime (i.e. occasional work on Sunday outside the normal tour of duty is considered overtime work).

** HAZARDOUS PAY DIFFERENTIAL **

An 8 percent differential is applicable to employees employed in a position that represents a high degree of hazard when working with or in close proximity to ordnance explosives and incendiary materials. This includes work such as screening blending dying mixing and pressing of sensitive ordnance explosives and pyrotechnic compositions such as lead azide black powder and photoflash powder. All dry-house activities involving propellants or explosives. Demilitarization modification renovation demolition and maintenance operations on sensitive ordnance explosives and incendiary materials. All operations involving re-grading and cleaning of artillery ranges.

A 4 percent differential is applicable to employees employed in a position that represents a low degree of hazard when working with or in close proximity to ordnance (or employees possibly adjacent to) explosives and incendiary materials which involves potential injury such as laceration of hands face or arms of the employee engaged in the operation irritation of the skin minor burns and the like; minimal damage to immediate or adjacent work area or equipment being used. All operations involving unloading storage and hauling of ordnance explosive and incendiary ordnance material other than small arms ammunition. These differentials are only applicable to work that has been specifically designated by the agency for ordnance explosives and incendiary material differential pay.

** UNIFORM ALLOWANCE **

If employees are required to wear uniforms in the performance of this contract (either by the terms of the Government contract by the employer by the state or local law etc.) the cost of furnishing such uniforms and maintaining (by laundering or dry cleaning) such uniforms is an expense that may not be borne by an employee where such cost reduces the hourly rate below that required by the wage determination. The Department of Labor will accept payment in accordance with the following standards as compliance:

The contractor or subcontractor is required to furnish all employees with an adequate number of uniforms without cost or to reimburse employees for the actual cost of the uniforms. In addition where uniform cleaning and maintenance is made the responsibility of the employee all contractors and subcontractors subject to this wage determination shall (in the absence of a bona fide collective bargaining agreement providing for a different amount or the furnishing of contrary affirmative proof as to the actual cost) reimburse all employees for such cleaning and maintenance at a rate of $3.35 per week (or $.67 cents per day). However in those instances where the uniforms furnished are made of ""wash and wear"" materials may be routinely washed and dried with other personal garments and do not require any special treatment such as dry cleaning daily washing or commercial laundering in order to meet the cleanliness or appearance standards set by the terms of the Government contract by the contractor by law or by the nature of the work there is no requirement that employees be reimbursed for uniform maintenance costs.

** SERVICE CONTRACT ACT DIRECTORY OF OCCUPATIONS **

The duties of employees under job titles listed are those described in the ""Service Contract Act Directory of Occupations"" Fifth Edition (Revision 1) dated September 2015 unless otherwise indicated.

** REQUEST FOR AUTHORIZATION OF ADDITIONAL CLASSIFICATION AND WAGE RATE Standard Form 1444 (SF-1444) **

Conformance Process:

The contracting officer shall require that any class of service employee which is not listed herein and which is to be employed under the contract (i.e. the work to be performed is not performed by any classification listed in the wage determination) be classified by the contractor so as to provide a reasonable relationship (i.e. appropriate level of skill comparison) between such unlisted classifications and the classifications listed in the wage determination (See 29 CFR 4.6(b)(2)(i)). Such conforming procedures shall be initiated by the contractor prior to the performance of contract work by such unlisted class(es) of employees (See 29 CFR 4.6(b)(2)(ii)). The Wage and Hour Division shall make a final determination of conformed classification wage rate and/or fringe benefits which shall be paid to all employees performing in the classification from the first day of work on which contract work is performed by them in the classification. Failure to pay such unlisted employees the compensation agreed upon by the interested

parties and/or fully determined by the Wage and Hour Division retroactive to the date such class of employees commenced contract work shall be a violation of the Act and this contract. (See 29 CFR 4.6(b)(2)(v)). When multiple wage determinations are included in a contract a separate SF-1444 should be prepared for each wage determination to which a class(es) is to be conformed.

The process for preparing a conformance request is as follows:

1) When preparing the bid the contractor identifies the need for a conformed occupation(s) and computes a proposed rate(s).

2) After contract award the contractor prepares a written report listing in order the proposed classification title(s) a Federal grade equivalency (FGE) for each proposed classification(s) job description(s) and rationale for proposed wage rate(s) including information regarding the agreement or disagreement of the authorized representative of the employees involved or where there is no authorized representative the employees themselves. This report should be submitted to the contracting officer no later than 30 days after such unlisted class(es) of employees performs any contract work.

3) The contracting officer reviews the proposed action and promptly submits a report of the action together with the agency's recommendations and pertinent information including the position of the contractor and the employees to the U.S. Department of Labor Wage and Hour Division for review (See 29 CFR 4.6(b)(2)(ii)).

4) Within 30 days of receipt the Wage and Hour Division approves modifies or disapproves the action via transmittal to the agency contracting officer or notifies the contracting officer that additional time will be required to process the request.

5) The contracting officer transmits the Wage and Hour Division's decision to the contractor.

6) Each affected employee shall be furnished by the contractor with a written copy of such determination or it shall be posted as a part of the wage determination (See 29 CFR 4.6(b)(2)(iii)).

Information required by the Regulations must be submitted on SF-1444 or bond paper.

When preparing a conformance request the ""Service Contract Act Directory of Occupations"" should be used to compare job definitions to ensure that duties requested are not performed by a classification already listed in the wage determination. Remember it is not the job title but the required tasks that determine whether a class is included in an established wage determination. Conformances may not be used to artificially split combine or subdivide classifications listed in the wage determination (See 29 CFR 4.152(c)(1))."

ATTACHMENT J
AFFIDAVIT re CONTINGENT FEES

CITY OF_____)
) ss.
ISLAND OF GUAM)

_____ (state name of affiant signing below), being first duly sworn, deposesand says that:

1. The name of the offering company or individual is (state name of company) _____.

2. As a part of the offering company's bid or proposal, to the best of my knowledge, the offering company has not retained any person or agency on a percentage, commission, or other contingent arrangement to secure this contract. This statement is made pursuant to UOG Procurement Manual Section 11.8 .2

3. As a part of the offering company's bid or proposal, to the best of my knowledge, the offering company has not retained a person to solicit or secure a contract with the government of Guam upon an agreement or understanding for a commission, percentage, brokerage, or contingent fee, except for retention of bona fide employees or bona fide established commercial selling agencies for the purpose of securing business. This statement is made pursuant to UOG Procurement Manual Section 11.8.1.

4. I make these statements on behalf of myself as a representative of the offeror, and on behalf ofthe offeror's officers, representatives, agents, subcontractors, and employees.

_____
Signature of one of the following:
Offeror, if the offeror is an individual;
Partner, if the offeror is a partnership;Officer, if the offeror is a corporation

Subscribed and sworn to before me

This_____day of_____, 20____

_____
NOTARY PUBLIC
My commission expires_____, _____
(AG Procurement Form 007 (Jul. 15. 2010)

EXHIBIT B

UOG BID NO. B21-

17

PURCHASING OF HVAC EQUIPMENT OF THE UNIVERSITY OF GUAM

Scope of Work

1. Scope of the Work
   This bid is to select and award a contract for the purchasing of multiple Air Conditioning units for the University of Guam.

2. Bid Submittals

   a) Bid prices shall be submitted on Bid Price Form. All prices shall include shipping, delivery,and manufacturer's warranty. Any additional cost not stated in this bid but are required to complete the delivery and installation must be included in the bidder's price.

   b) Bidder shall submit an electronic copy to the Share folder that UOG procurement officeprovides.

   Contractor is required to submit prices for Table 1.0.
   Bid award to be based on the required items in Table 1.0 and to be based on price, compliance to the specification, services, delivery and any requirements in the BID package, BID NO. B21-17.

Table 1.0 Bid Price Form

No.	ITEM DESCRIPTION					BID Price
1	LOCATION	UNIT	TONS	VOLTAGE	TVX	
	RFK BUILDING SECOND FLOOR	1	50	208 / 230	2 EA. - 25	
	RFK BUILDING FIRST FLOOR	1	40	208 / 230	2 EA. -	
	20RFK BUILDING FIRST FLOOR MAIN ENTRANCE	1	15	208 / 230	2 EA. -	
	7.5RFK BUILDING FIRST FLOOR AV ROOM	1	15	208 / 230	2 EA. -	
	7.5RFK BUILDING FIRST FLOOR OFFICES	1	20	208 / 230	2 EA. - 10	
	PIP (GLE) SECOND FLOOR	1	20	208 / 230	2 EA. -	
	10SCIENCE BUILDING FIRST FLOOR	1	40	208 / 230	2 EA. -	
	20SCIENCE BUILDING SECOND FLOOR	1	40	208 / 230	2 EA. -	
	20SCIENCE BUILDING THIRD FLOOR	1	20	208 / 230	2 EA. -	
	10EGLISH COMMUNICATION BUILDING CLASSROO	1	30	208 / 230	2 EA. -	
	15COMPUTER CENTER OIT					

	BUILDING FIRST FLOOR	1	50	277 / 460	2 EA. - 25	
	LECTURE HALL AUDITORIUM	1	20	277 / 460	2 EA. - 10	
	MARINE LAB FIRST FLOOR	2	10	208 / 230	2 EA. - 5	
	MARINE LAB SECOND FLOOR	2	10	208 / 230	2 EA. – 5	
	HSS BUILDING	2	50	277 / 460	2 EA. – 25	
	HSS BUILDING	1	30	277 / 460	2 EA. – 15	
Grand Total						
Delivery:_____weeks after receipt of purchase order						

OPTIONS

For Table 2.0 Options, the bidder's price will not be included as part of the total price evaluation for this bid award. UOG reserves the right to excercise any or part of the options requested. Insert any additional options recommended.

Table 2.0 Options

No.	Item Description	Price
1	Services for Maintenance and upkeep.	
2	Services for disposal.	
3	Replacement/trade in program	

OTHER NOTES:

1. These specifications have been written to describe minimum equipment and performance requirements to be supplied by the equipment manufacturer bidding. Reasonable tests may be conducted upon delivery before acceptance.

2. The University reserves the right to accept and/or reject any and all bids, to waive any defects, irregularities, or specification discrepancies and to award the bid deemed to be in the best interest of the University.

NOTE: Name and title of author of specifications:

University of Guam

Glenn Leon Guerrero, Director, Facilities Mangement & Services, Email: glennlg@triton.uog.edu

Emily Gumataotao, Supply Management Administrator, Email: eggumataotao@triton.uog.edu

EXHIBIT A

University of Guam

BID SPECIFICATIONS

OR EQUIVALENT

BID NO. B21-17

JR0529 UOG HVAC EQUIPMENT PURCHASE

4/27/2021

Prepared by:

AMORIENT

Prepared for:

UNIVERSITY OF GUAM

SECTION 23 81 00
DECENTRALIZED UNITARY HVAC EQUIPMENT

PART 1

GENERAL

1.1 REFERENCES

The publications listed below form a part of this specification to the extent referenced. The publications are referred to within the text by the basic designation only.

AIR MOVEMENT AND CONTROL ASSOCIATION INTERNATIONAL, INC. (AMCA)

AMCA 500-D	(2018) Laboratory Methods of Testing Dampers for Rating
AMCA 500-L	(2015) Laboratory Methods of Testing Louvers for Rating

AIR-CONDITIONING, HEATING AND REFRIGERATION INSTITUTE (AHRI)

AHRI 540	(2015) Performance Rating Of Positive Displacement Refrigerant Compressors And Compressor Units
AHRI 700	(2016) Specifications for Fluorocarbon Refrigerants
ANSI/AHRI 210/240	(2008; Add 1 2011; Add 2 2012) Performance Rating of Unitary Air-Conditioning & Air-Source Heat Pump Equipment
ANSI/AHRI 270	(2008) Sound Rating of Outdoor Unitary Equipment
ANSI/AHRI 460	(2005) Performance Rating of Remote Mechanical-Draft Air-Cooled Refrigerant Condensers

AMERICAN SOCIETY OF HEATING, REFRIGERATING AND AIR-CONDITIONING ENGINEERS (ASHRAE)

ANSI/ASHRAE 15 & 34	(2013) ANSI/ASHRAE Standard 15 Safety Standard for refrigeration systems and ANSI/ASHRAE Standard 34-Designtion and Safety Classification of Refrigerants
ASHRAE 15 & 34	(2013) ASHRAE Standard 34-2016 Safety Standard for Refrigeration Systems/ASHRAE Standard 34-2016 Designation and Safety Classification of Refrigerants-ASHRAE Standard 34-2016
ASHRAE 52.2	(2012) Method of Testing General Ventilation Air-Cleaning Devices for Removal Efficiency by Particle Size
ASHRAE 55	(2010) Thermal Environmental Conditions for Human Occupancy
ASHRAE 62.1	(2010) Ventilation for Acceptable Indoor Air Quality
ASHRAE 64	(2011) Methods of Testing Remote Mechanical-Draft Evaporative Refrigerant Condensers
ASHRAE 90.1 - IP	(2013) Energy Standard for Buildings Except Low-Rise Residential Buildings
ASHRAE 90.1 - SI	(2013) Energy Standard for Buildings Except Low-Rise Residential Buildings

ASTM INTERNATIONAL (ASTM)

ASTM A307	(2014; E 2017) Standard Specification for Carbon Steel Bolts, Studs, andThreaded Rod 60 000 PSI Tensile Strength
ASTM B117	(2019) Standard Practice for Operating Salt Spray (Fog) Apparatus
ASTM C1071	(2019) Standard Specification for Fibrous Glass Duct Lining Insulation (Thermal and Sound Absorbing Material)
ASTM D520	(2000; R 2011) Zinc Dust Pigment
ASTM E84	(2020) Standard Test Method for Surface Burning Characteristics of Building Materials
ASTM F104	(2011; R 2020) Standard Classification System for onmetallic Gasket Materials

NATIONAL ELECTRICAL MANUFACTURERS ASSOCIATION (NEMA)

NEMA ICS 6	(1993; R 2016) Industrial Control and Systems:Enclosures
NEMA MG 1	(2018) Motors and Generators
NEMA MG 2	(2014) Safety Standard for Construction and Guide for Selection, Installation and Use of Electric Motors and Generators

NATIONAL FIRE PROTECTION ASSOCIATION (NFPA)

NFPA 70	(2020; ERTA 20-1 2020; ERTA 20-2 2020; TIA20-1; TIA 20-2; TIA 20-3; TIA 20-4) National Electrical Code

UNDERWRITERS LABORATORIES (UL)

UL 586	(2009; Reprint Dec 2017) UL Standard for Safety High-Efficiency Particulate, Air Filter Units
UL 900	(2015) Standard for Air Filter Units
UL 1995	(2015) UL Standard for Safety Heating and Cooling Equipment

1.2 SUBMITTALS

SD-03 Product Data Spare Parts

Posted Instructions

Coil Corrosion Protection System Performance Tests Training

Inventory

Environmental Data

Supplied Products

SD-06 Test Reports

Refrigerant Tests, Charging, and Start-Up

System Performance Tests

SD-07 Certificates Service

Organizations

SD-10 Operation and Maintenance Data

Operation and Maintenance Manuals

1.3 DELIVERY, STORAGE, AND HANDLING

Protect stored items from the weather, humidity and temperature variations, dirt and dust, or other contaminants. Properly protect and care for all material both before and during installation. Submit an inventory of all the stored items. Replace any materials found to be damaged, at no additional cost to the Government. During installation, cap piping and similar openings capped to keep out dirt and other foreign matter.

1.4 ENVIRONMENTAL REQUIREMENTS

For proper Indoor Environmental Quality, maintain pressure within the building as indicated. Ventilation mustmeet or exceed ASHRAE 62.1 and all published addenda. Meet or exceed filter media efficiency as tested in accordance with ASHRAE 52.2. Thermal comfort must meet or exceed ASHRAE 55.

1.5 WARRANTY

Provide equipment with the 1 year manufacturer's warranty

PART 2 PRODUCTS

2.1 MATERIALS

Provide Manufacturer's standard catalog data, at least 5 weeks prior to the purchase or installation of a particular component, highlighted to show material, size, options, performance charts and curves, etc. in adequate detail to demonstrate compliance with contract requirements. Data includes manufacturer's recommended installation instructions and procedures. If vibration isolation is specified for a unit, include vibration isolator literature

containing catalog cuts and certification that the isolation characteristics of the isolators provided meet the manufacturer's recommendations. Submit data for each specified component. Minimum efficiency requirementsmust be in accordance with ASHRAE 90.1.

2.1.1 Standard Products

Provide materials and equipment that are standard products of a manufacturer regularly engaged in the manufacturing of such products, which are of a similar material, design and workmanship. The standard productsmust have been in satisfactory commercial or industrial use for 2 years prior to bid opening. The 2 year use includes applications of equipment and materials under similar circumstances and of similar size. The 2 years' experience must be satisfactorily completed by a product which has been sold or is offered for sale on the commercial market through advertisements, manufacturer's catalogs, or brochures. Products having less than a 2 year field service record will be acceptable if a certified record of satisfactory field operation, for not less than 6000 hours exclusive of the manufacturer's factory tests, can be shown. Products must be supported by a service organization. Ensure system components are environmentally suitable for the indicated geographic locations.

2.1.2 Product Sustainability Criteria

2.1.2.1 Energy Efficient Equipment

Provide equipment meeting the minimum efficiency requirement as required by ASHRAI 90.1.

2.1.2.2 Electrical Equipment / Motors

Electrical motor driven equipment specified must be provided complete with motors, motor starters, and controls. Electrical characteristics must be as shown, and unless otherwise indicated, all motors of 1 horsepower and above with open, drip proof, totally enclosed, or explosion proof fan cooled enclosures, must be the premium efficiency type in accordance with NEMA MG 1. Field wiring must be in accordance with manufacturer's instructions. Each motor must conform to NEMA MG 1 and NEMA MG 2 and be of sufficient size to drive the equipment at the specified capacity without exceeding the nameplate rating of the motor. Motors must be continuous duty with theenclosure specified. Motor starters must be provided complete with thermal overload protection and other appurtenances necessary for the motor control indicated. Motors must be furnished with a magnetic across-the- line or reduced voltage type starter as required by the manufacturer. Motor duty requirements must allow for maximum frequency start-stop operation and minimum encountered interval between start and stop. Motors must be sized for the applicable loads. Motor torque must be capable of accelerating the connected load within 20 seconds with 80 percent of the rated voltage maintained at motor terminals during one starting period. Motor bearings must be fitted with grease supply fittings and grease relief to outside of enclosure. Manual or automatic control and protective or signal devices required for the operation specified and any control wiring required for controls and devices specified, but not shown, must be provided.

2.1.2.3 Ozone Depleting Substances

Unitary air conditioning equipment must not use CFC-based refrigerants. Refrigerant shall be R-410A or may be an approved alternative refrigerant in accordance with EPA's Significant New Alternative Policy (SNAP) listing.

2.1.3 Nameplates

Major equipment including compressors, condensers, receivers, heat exchanges, fans, and motors must have the manufacturer's name, address, type or style, model or serial number, and catalog number on a plate secured to the item of equipment. Plates must be durable and legible throughout equipment life and made of stainless steel. Fix plates in prominent locations with nonferrous screws or bolts.

2.1.4 Safety Devices

Exposed moving parts, parts that produce high operating temperature, parts which may be electrically energized, and parts that may be a hazard to operating personnel must be insulated, fully enclosed, guarded, or fitted with other types of safety devices. Safety devices must be installed so that proper operation of equipment is not impaired. Welding and cutting safety requirements must be in accordance with AWS Z49.1.

2.2 EQUIPMENT

2.2.1 Large-Capacity Split-System Air Conditioners (Greater Than 65,000 Btu/h)

Provide an air-cooled, split system which employs a remote condensing unit, a separate indoor unit, and interconnecting refrigerant piping. Provide the air conditioning type unit conforming to applicable Underwriters Laboratories (UL) standards including UL 1995. Unit must be rated in accordance with ANSI/AHRI 210/240. Provide unit with necessary fans, air filters, and cabinet construction as specified in paragraph UNITARY EQUIPMENT ACCESSORIES. Provide double-width, double inlet, forward curved centrifugal scroll type evaporator or supply fans. Provide the manufacturer's standard for the unit specified and may be centrifugal scroll type condenser or outdoorfans. Enclose fan condenser motors in totally enclosed enclosures and permanently lubricate ball bearings. Air Conditioners must have a minimum energy efficiency ratio (EER) of 12.

2.2.1.1 Air-To-Refrigerant Coil

Provide coils with copper tubes of 3/8 inch minimum diameter with copper fins that are mechanically bonded or soldered to the tubes. Provide casing of galvanized steel. Avoid contact of dissimilar metals. Test coils in accordance with ASHRAE 15 & 34 at the factory and ensure suitability for the working pressure of the installed system. Dehydrate and seal each coil testing and prior to evaluation and charging. Provide each unit with a factory operating charge of refrigerant and oil. Field charge unit shipped with a holding charge with refrigerant and oil. Provide separate expansion devices for each compressor circuit. Condenser coil must have special coating for corrosion resistance. Condenser coil must be copper finned. Coat condenser and evaporator coil with a uniformly applied epoxy electrodeposition, phenolic, or vinyl type coating to all coil surface areas without material bridging between fins. Apply coating at either the coil or coating manufacturer's factory. Coating process must ensure complete coil encapsulation and be capable of withstanding a minimum 1,000 hours exposure to the salt spray test specified in ASTM B117 using a 5 percent sodium chloride solution.

2.2.1.2 Refrigeration Circuit

Refrigerant-containing components must comply with ASHRAE 15 & 34 and be factory tested, cleaned, dehydrated, charged, and sealed. Provide refrigerant charging valves and connections, and pumpdown valves foreach circuit.

2.2.1.3 Unit Controls

Provide unit internally prewired with a 208 volt control circuit powered by an internal transformer. Provide terminal blocks for power wiring and external control wiring. Unit must have cutoffs high and low pressure, andlow oil pressure for compressors with positive displacement oil pumps, supply fan failure, and safety interlocks on all service panels. Stage multiple compressors by means of a time delay. Internally protect unit by a circuit breaker in accordance with UL 1995.

2.2.1.4 Condensing Unit

Fit each remote condenser coil with a manual isolation valve and an access valve on the coil side. Saturated refrigerant condensing temperature must not exceed 120 degrees F at 95 degrees F ambient. Fan and condensermotors must have totally enclosed enclosures.

2.2.1.4.1 Air-Cooled Condenser

Provide unit rated in accordance with ANSI/AHRI 460 and conform to the requirements of UL 1995. Provide factoryfabricated, tested, packaged, and self-contained unit. Unit must be complete with casing, propeller or centrifugal type fans, heat rejection coils, connecting piping and wiring, and all necessary appurtenances.

a. Provide interconnecting refrigeration piping, electrical power, and control wiring between thecondensing unit and the indoor unit as required and as indicated. Provide electrical and refrigeration piping terminal connections between condensing unit and evaporator units.

b. Low ambient control for multi-circuited units serving more than one evaporator coil must provide independent condenser pressure controls for each refrigerant circuit. Set controls to produce a minimum of 95 degrees F saturated refrigerant condensing temperature. Provide unitwith a liquid subcooling circuit that ensures proper liquid refrigerant flow to the expansion device over the specified application range of the condenser. Unit must be provided with manufacturer's standard liquid subcooling. Liquid seal the subcooling circuit.

c. Coils must have copper tubes of 3/8 inch minimum diameter with copper fins that are mechanically bonded or soldered to the tubes. Protect coil in accordance with paragraph COIL CORROSION PROTECTION. Casing must be galvanized steel or aluminum. Avoid contact of dissimilar metals. Test coils in accordance with ASHRAE 15 & 34 at the factory and ensure suitability for the working pressure of the installed system. Dehydrate and seal each coil after testing and prior to evaluation and charging. Provide each unit with a factory operating charge ofrefrigerant and oil or a holding charge. Field charge unit shipped with a holding charge. Provide separate expansion devices for each compressor circuit.

d. Provide a complete control system with required accessories for regulating condenser pressure by fan cycling, solid-state variable fan speed, modulating condenser coil or fan dampers, floodingthe condenser, or a combination of the above. Construct unit mounted control panels or enclosures in accordance with applicable requirements of NFPA 70 and house in NEMA ICS 6, Class 1 or 3A enclosures. Controls must include overload protective devices, interface with local and remote components, and intercomponent wiring to terminal block points.

2.2.1.4.2 Compressors

Provide compressor rated in accordance with AHRI 540. Provide direct drive, semi-hermetic or hermetic reciprocating, or scroll type compressor capable of operating at partial load conditions. Compressor must be capable of continuous operation down to the lowest step of unloading as specified. Provide units 120,000 Btuh andlarger with capacity reduction devices to produce automatic capacity reduction of at least 50 percent. If standard with the manufacturer, two or more compressors may be used in lieu of a single compressor with unloading capabilities, in which case the compressors operate in sequence, and each compressor must have an independent refrigeration circuit through the condenser and evaporator. Each compressor must start in the unloaded position. Provide each compressor with vibration isolators, crankcase heater, lubrication pump, thermal overloads, and high and low pressure safety cutoffs and protection against short cycling.

2.2.1.5 Filters

Provide filters of the sectional or panel type, capable of filtering the entire air supply. Mount filter(s) integral within the unit and make accessible by hinged access panel(s). Factory supply 2.0 inch, MERV 13, throwaway filters. Filters must have an average dust spot efficiency of 90-95 percent and an average arrestance of 90 percentwhen tested in accordance with ASHRAE 52.2. Provide UL Class 1 filters.

2.4 COMPONENTS

2.4.1 Refrigerant and Oil

The air-conditioning system shall use R410A. Refrigerants must have number designations and safety classifications in accordance with ASHRAE 15 & 34. Refrigerants must meet the requirements of AHRI 700 as a minimum. Provide a complete charge of refrigerant for the installed system as recommended by the manufacturer. Lubricating oil must be of a type and grade recommended by the manufacturer for each compressor. Where color leak indicator dye is incorporated, charge must be in accordance with manufacturer's recommendation.

2.4.2 Fans

Fan wheel shafts must be supported by either maintenance-accessible lubricated antifriction block-type bearings, or permanently lubricated ball bearings. Unit fans must be selected to produce the cfm required at the fan total pressure. Motor starters, if applicable, must be magnetic across-the-line type with a totally enclosed enclosure. Thermal overload protection must be of the manual or automatic-reset type. Fan wheels or propellers must be constructed of aluminum or galvanized steel. Centrifugal fan wheel housings must be of galvanized steel, and both centrifugal and propeller fan casings must be constructed of aluminum or galvanized steel. Steel elements of fans, except fan shafts, must be hot-dipped galvanized after fabrication or fabricated of mill galvanized steel. Mill- galvanized steel surfaces and edges damaged or cut during fabrication by forming, punching, drilling, welding, or cutting must be recoated with an approved zinc-rich compound. Fan wheels or propellers must be statically and dynamically balanced. Centrifugal scroll-type fans must be provided with streamlined orifice inlet and V-belt drive. Each drive will be independent of any other drive. Propeller fans must be V-belt drive type with fixed pitch blades. V-belt driven fans must be mounted on a corrosion protected drive shaft supported by either maintenance-accessible lubricated antifriction block-type bearings, or permanently lubricated ball bearings. Each drive will be independent of any other drive. Drive bearings must be protected with water slingers or shields. V-belt drives mustbe fitted with guards where exposed to contact by personnel and fixed pitch sheaves.

2.4.3 Air Filters

Provide filters to filter outside air and return air and locate inside combination air filter mixing box. Provide replaceable (throw-away) high efficiency type. Filters must conform to UL 900, Class 1. Polyurethane filters cannot be used on units with multiframe filters. Air filters must be listed in accordance with requirements ofUL 900, except high efficiency particulate air filters of 99.97 percent efficiency by the DOP Test Method mustbe as listed under the label service and must meet the requirements of UL 586.

2.4.3.1 High Efficiency Filters

Additional high efficiency particulate air (HEPA) filters shall be provided. Filters must have a MERV of 17 when tested in accordance with ASHRAE 52.2. Filter assembly must include; holding frame and fastener assembly, filter cartridge, mounting frame, and retainer assembly. Reinforce filter media with glass fiber mat. Pressure drop across

clean filter shall not exceed 1 inches of water gage.

2.4.5 Mixing Boxes

Mixing boxes must match the base unit in physical size and must include equally sized openings, each capable offull air flow. Arrangement must be as indicated.

2.4.6 Cabinet Construction

Casings for the specified unitary equipment must be constructed of galvanized steel with a weather and corrosion resistant enamel finish or aluminum sheet metal and galvanized or aluminum structural members. If cabinet is enamel-finished galvanized steel, the cabinet finish shall be tested in accordance with ASTM B-117 salt spray surface scratch test (SST) procedure for a minimum of 1000 hours. Such documentation shall be included in all submittals. Minimum thickness of single wall exterior surfaces must be 18 gauge galvanized steel or 0.071 inch thick aluminum on units with a capacity above 20 tons and 20 gauge galvanized steel or 0.064 inch thick aluminum on units with a capacity less than 20 tons. Casing must be fitted with lifting provisions, access panels or doors, fan vibration isolators, electrical control panel, corrosion-resistant components, structural support members, insulatedcondensate drip pan and drain, and internal insulation in the cold section of the casing. Where double-wall insulated construction is proposed, minimum exterior galvanized sheet metal thickness must be 20 gauge.
Provisions to permit replacement of major unit components must be incorporated. Penetrations of cabinet surfaces, including the floor, must be sealed. Unit must be fitted with a drain pan which extends under all areas where water may accumulate. Drain pan must be fabricated from Type 300 stainless steel, galvanized steel with protective coating as required, or an approved plastic material. Pan insulation must be water impervious. Extent and effectiveness of the insulation of unit air containment surfaces must prevent, within limits of the specified insulation, heat transfer between the unit exterior and ambient air, heat transfer between the two conditioned airstreams, and condensation on surfaces. Insulation must conform to ASTM C1071.

2.4.6.1 Indoor Cabinet

Indoor cabinets must be suitable for the specified indoor service and enclose all unit components.

2.4.6.2 Outdoor Cabinet

Outdoor cabinets must be suitable for outdoor service with a weathertight, insulated and corrosion-protected structure. Cabinets constructed exclusively for indoor service which have been modified for outdoor service arenot acceptable.

2.6 FINISHES

2.6.1 Coil Corrosion Protection

Provide coil with a uniformly applied epoxy electrodeposition, phenolic, or vinyl type coating to all coil surfaceareas without material bridging between fins. Submit product data on the type coating selected, the coating thickness, the application process used, the estimated heat transfer loss of the coil, and verification of conformance with the salt spray test requirement. Coating must be applied at either the coil or coating manufacturer's factory. Coating process must ensure complete coil encapsulation. Coating must be capable ofwithstanding a minimum 1,000 hours exposure to the salt spray test specified in ASTM B117 using a 5 percentsodium chloride solution.

2.6.2 Equipment and Components Factory Coating

Unless otherwise specified, equipment and component items, when fabricated from ferrous metal, must be factory finished with the manufacturer's standard finish, except that items located outside of buildings must haveweather resistant finishes that will withstand 500 hours exposure to the salt spray test specified in ASTM B117 using a 5 percent sodium chloride solution. Immediately after completion of the test, the specimen must show no signs of blistering, wrinkling, cracking, or loss of adhesion and no sign of rust creepage beyond 1/8 inch on either side of the scratch mark. Cut edges of galvanized surfaces where hot-dip galvanized sheet steel is used must be coated with a zinc-rich coating conforming to ASTM D520, Type I.
Where stipulated in equipment specifications of this section, coat finned tube coils of the affected equipment as specified below. Apply coating at the premises of a company specializing in such work. Degrease and prepare for coating in accordance with the coating applicator's procedures for the type of metals involved. Completed coatingmust show no evidence of softening, blistering, cracking, crazing, flaking, loss of adhesion, or "bridging" between the fins.

2.6.2.1 Phenolic Coating

Provide a resin base thermosetting phenolic coating. Apply coating by immersion dipping of the entire coil. Providea minimum of two coats. Bake or heat dry coils following immersions. After final immersion and prior to final baking, spray entire coil with particular emphasis given to building up coating on sheared edges. Total dry film thickness must be 2.5 to 3.0 mils.

2.6.2.2 Chemical Conversion Coating with Polyelastomer Finish Coat

Dip coils in a chemical conversion solution to molecularly deposit a corrosion resistant coating by electrolysis action. Cure conversion coating at a temperature of 110 to 140 degrees F for a minimum of 3 hours. Coat coil surfaces with a complex polymer primer with a dry film thickness of 1 mil. Cure primer coat for a minimum of 1hour. Using dip tank method, provide three coats of a complex polyelastomer finish coat. After each of the firsttwo finish coats, cure the coils for 1 hour. Following the third coat, spray a fog coat of an inert sealer on the coilsurfaces. Total dry film thickness must be 2.5 to 3.0 mils. Cure finish coat for a minimum of 3 hours. Coating materials must have 300 percent flexibility, operate in temperatures of minus 50 to plus 220 degrees F, and protect against atmospheres of a pH range of 1 to 14.

2.6.2.3 Vinyl Coating

Apply coating using an airless fog nozzle. For each coat, make at least two passes with the nozzle. Materials to be applied are as follows:

a. Total dry film thickness, 6.5 mils maximum

b. Vinyl Primer, 24 percent solids by volume: One coat 2 mils thick

c. Vinyl Copolymer, 30 percent solids by volume: One coat 4.5 mils thick

2.6.3 Factory Applied Insulation

Refrigeration equipment must be provided with factory installed insulation on surfaces subject to sweating including the suction line piping. Where motors are the gas-cooled type, factory installed insulation must be provided on the cold-gas inlet connection to the motor in accordance with manufacturer's standard practice. Factory insulated items installed outdoors are not required to be fire-rated. As a minimum, factory insulated items installed indoors must have a flame spread index no higher than 75 and a smoke developed index no higherthan 150. Factory insulated items (no jacket) installed indoors and which are located in air plenums, in ceiling spaces, and in attic spaces must have a flame spread index no higher than 25 and a smoke developed index no higher than 50. Flame spread and smoke developed indexes must be determined by ASTM E84.
Insulation must be tested in the same density and installed thickness as the material to be used in the actualconstruction. Material supplied by a manufacturer with a jacket must be tested as a composite material.
Jackets, facings, and adhesives must have a flame spread index no higher than 25 and a smoke developed index no higher than 50 when tested in accordance with ASTM E84.

2.7 TESTS, INSPECTIONS, AND VERIFICATIONS

All manufactured units must be inspected and tested, and documentation provided to demonstrate that each unit is in compliance with ANSI/AHRI and UL requirements and that the minimum efficiency requirements of ASHRAE 90.1 - IP have been met.

DIVISION23-HEATING,VENTILATING,ANDAIRCONDITIONING(HVAC)

(HVAC) SECTION 23 81 29 VARIABLE REFRIGERANTFLOWHVACSYSTEMS

PART 1 GENERAL

1.1 SUMMARY

Provide a complete Air Source, Cooling Only type Variable Refrigerant Flow (VRF) System consisting of one or moreoutdoor compressor units and multiple indoor fan coil units as specified in this Section and in accordance with the following:

a. The complete system must be a tested combination in accordance with AHRI 1230.

b. Provide cooling only control for each zone

c. For systems which simultaneously heat and cool, the outdoor units must be interconnected to the indoor units through branch selector boxes in accordance with the manufacturer's engineering data detailing each indoor unit. The indoor units and outdoor must be connected tothe branch selector boxes utilizing the manufacturer's specified piping joints and headers.

1.2 REFERENCES

The publications listed below form a part of this specification to the extent referenced. The publications arereferred to within the text by the basic designation only.

AIR-CONDITIONING, HEATING AND REFRIGERATION INSTITUTE (AHRI)

AHRI 1230	(2010; Addendum 1 2011; Addendum 2 2014) Performance Rating of Variable Refrigerant Flow (VRF) Multi-Split Air-Conditioning and HeatPump Equipment
ANSI/AHRI 270	(2008) Sound Rating of Outdoor Unitary Equipment
ANSI/AHRI 760	(2007) Performance Rating of Solenoid Valves for Use With VolatileRefrigerants

AMERICAN SOCIETY OF HEATING, REFRIGERATING AND AIR-CONDITIONING ENGINEERS (ASHRAE)

ANSI/ASHRAE 15 & 34	(2013) ANSI/ASHRAE Standard 15-Safety Standard for Refrigeration Systems and ANSI/ASHRAE Standard 34-Designation and SafetyClassification of Refrigerants
ASHRAE 90.1 - IP	(2013) Energy Standard for Buildings Except Low-Rise ResidentialBuildings

ASTM INTERNATIONAL (ASTM)

ASTM A307	(2014; E 2017) Standard Specification for Carbon Steel Bolts, Studs, and

	Threaded Rod 60 000 PSI Tensile Strength
ASTM B117	(2019) Standard Practice for Operating Salt Spray (Fog) Apparatus
ASTM D520	(2000; R 2011) Zinc Dust Pigment
ASTM E84	(2020) Standard Test Method for Surface Burning Characteristics ofBuilding Materials
ASTM F104	(2011; R 2020) Standard Classification System for Nonmetallic GasketMaterials

NATIONAL ELECTRICAL MANUFACTURERS ASSOCIATION (NEMA)

NEMA 250	(2018) Enclosures for Electrical Equipment (1000 Volts Maximum)
NEMA MG 1	(2018) Motors and Generators
NEMA MG 2	(2014) Safety Standard for Construction and Guide for Selection, Installation and Use of Electric Motors and Generators

U.S. DEPARTMENT OF ENERGY (DOE)

Energy Star	(1992; R 2006) Energy Star Energy Efficiency Labeling System (FEMP)

U.S. NATIONAL ARCHIVES AND RECORDS ADMINISTRATION (NARA)

40 CFR 82	Protection of Stratospheric

Ozone UNDERWRITERS

LABORATORIES (UL)

UL 207	(2009; Reprint Jan 2020) Refrigerant-Containing Components and Accessories, Nonelectrical
UL 429	(2013; Reprint Jan 2020) Electrically Operated Valves
UL 586	(2009; Reprint Dec 2017) UL Standard for Safety High-Efficiency Particulate, Air Filter Units
UL 900	(2015) Standard for Air Filter Units
UL 1995	(2015) UL Standard for Safety Heating and Cooling Equipment

1.3 SUBMITTALS

SD-01 Preconstruction Submittals

Verification Of Existing

Conditions

SD-02 Shop Drawings

VRF System Contractor Design

DrawingsSD-03 Product Data

Spare Parts Data

Coil Corrosion Protection

Manufacturer's Standard Catalog

DataSample Warranty

Refrigerant SDS

SheetsSD-05 Design Data

Manufacturer's Engineering

DataSD-06 Test Reports

System Performance

TestsSD-07 Certificates

Service

Organizations

Warranty

Electronic Refrigerant Leak Detector Calibration

Ozone Depleting Substances Technician

Certification

SD-08 Manufacturer's Instructions Manufacturer's

InstructionsSD-09 Manufacturer's Field Reports

Refrigerant Charging

1.4 QUALITY ASSURANCE

Complete VRF systems must be purchased from a single supplier. The VRF system supplier must be responsible for providing a fully functional VRF system.

Prior to purchase of equipment, shop drawings (e.g. equipment layout, plans and elevations, refrigerant piping system plans, etc.) must be approved by the VRF manufacturers representative. Include approval with name andcontact information of VRF manufacturer's representative in the submittal.

1.5 QUALITY CONTROL

1.5.1 Standard Products

Provide materials and equipment that are standard products of a manufacturer regularly engaged in the manufacturing of such products, which are of a similar material, design and workmanship. The standard products must have been in satisfactory commercial or industrial use for 3 years immediately prior to the solicitation of this contract. The 3 year use includes applications of equipment and materials under similar circumstances and of similar size. The 3 years' experience must be satisfactorily completed by a product which has been sold on the commercial market through advertisements, manufacturer's

catalogs, or brochures. Products must be supported by a service organization. Ensure system components are environmentally suitable for the indicated geographic locations.

1.5.2 Manufacturer's Engineering Data

Submit VRF manufacturer's engineering data with the shop drawings under separate cover. Strike outirrelevant items and options not to be installed. Provide all input and output reports for all selection procedures required by the manufacturer and as required by this section. Engineering data must include:

a. Selection Procedures:
   1. Indoor and Outdoor Units
   2. Branch Selector Units
   3. Piping Material and Fittings
   4. Refrigerant Mass for system
   5. Refrigerant Classification

b. System Efficiency Curves/Data including:
   1. Efficiency correlated with OAT
   2. At least five (5) data points covering full range of operation
   3. Minimum and maximum values over the operational range
   4. Efficiency at Standard AHRI conditions.

1.5.3 Manufacturer's Instructions

Submit VRF manufacturer's instructions with the shop drawings under separate cover. Strike outirrelevant items and options not to be installed. Provide with the following:

a. Installation: Include mechanical, electrical, controls and piping complete installation requirements.
b. Operation: Include startup, normal operation and shutdown procedures.
c. Maintenance: Include preventative.

1.6 DELIVERY, STORAGE, AND HANDLING

Protect stored items from the weather, humidity and temperature variations, dirt and dust, or other contaminants. Properly protect and care for all material both before and during installation. Submit an inventory of all the stored items. Replace any materials found to be damaged, at no additional cost to the Government.
During installation, keep piping and similar openings capped to keep out dirt and other foreign matter.

1.7 WARRANTY

Provide VRF manufactured equipment with the Manufacturer's Standard Warranty in addition to the Warranty of Construction. Submit Sample Warranty prior to construction. Compare warranty requirements with the requirements of this contract and identify discrepancies in the submittal that would prevent coverage of warranty by the manufacturer.

PART 2 PRODUCTS

All products used to meet this specification must meet the indicated requirements, but not all products specified here will be required by every project.

2.1 MATERIALS

Provide Manufacturer's standard catalog data, at least 5 weeks prior to the purchase or installation of a particular component, highlighted to show material, size, options, performance charts and curves, in adequate detail to demonstrate compliance with contract requirements. If field installed vibration isolation is specified for a unit, include vibration isolator literature containing catalog cuts and certification that the isolation characteristics of theisolators provided meet the manufacturer's recommendations. Submit data for each specified component.
Minimum efficiency requirements must be in accordance with ASHRAE 90.1 - IP.

2.1.1 Performance Requirements

Provide energy efficiency curve and data of EFFICIENCY vs. OAT. Provide at least five data points over the full range of operation capturing the minimums and maximums.

2.1.1.1 Variable Refrigerant Flow Multi-Split Air Conditioners

Information on Energy Star requirements can be found at https://www.energystar.gov/products/heating cooling/light commercial heating cooling/light commercial hvac key product criteria

2.1.1.2 Electrical Equipment / Motors

Electrical motor driven equipment specified must be provided complete with motors, motor starters, and controls.Electrical characteristics must be as shown, and unless otherwise indicated and field wiring must be in accordance with manufacturer's instructions. All motor(s):

a. 1 horsepower and above must be the premium efficiency type in accordance with NEMA MG 1.

b. Conform to NEMA MG 1 and NEMA MG 2 and be of sufficient size to drive the equipment at thespecified capacity without exceeding the nameplate rating.

c. Continuous duty with the enclosure specified.

d. Starters must be provided complete with thermal overload protection and other appurtenancesnecessary for the motor control indicated.

e. Furnished with a magnetic across-the-line or reduced voltage type starter as required by themanufacturer.

f. Duty requirements must allow for maximum frequency start-stop operation and minimumencountered interval between start and stop.

g. Must be sized for all applicable loads.

h. Bearings with grease supply fittings must have grease relief to outside of enclosure.

i. Automatic control and protective or signal devices required for the operation specified and anycontrol wiring required for controls and devices specified, but not shown, must be provided.

2.1.1.3 Refrigerant

The air-conditioning system shall use R410A.

2.1.2 Safety Devices

Exposed moving parts, parts that produce high operating temperature, parts which may be electrically energized, and parts that may be a hazard to operating personnel must be insulated, fully enclosed, guarded, or fitted with other types of safety devices.

2.2.1 Zone Control

Provide a Space Sensor Module for each fan coil unit unless otherwise indicated in contract drawings and withthe following additional requirements:

a. Displays the current temperature, temperature setpoint, fans status, occupancy status and conditioning mode at the same time. If information is displayed electronically then it must be illuminated.

b. Temperature setpoint adjustment in one degree increments.

c. Fans speed control (At least: High-low-Auto).

d. Occupancy override button which changes the mode of the zone to occupied for one hour perpress of occupancy override button with 8 hours maximum at any instance.

2.3 INDOOR FAN COIL

UNITSProvide with the

following:

a. Factory complete, tested and pre-wired with all necessary electronic and refrigerantcontrols.

b. Equipped with auto-restart function and test run capability either via a switch or controller.

c. Refrigerant: Refrigerant circuits factory-charged with dehydrated inert gas.

d. Coils: Direct expansion type constructed from copper, aluminum, or copper and aluminum.

e. Fans: Direct-drive, with statically and dynamically balanced impellers; variable speed ECM unlessotherwise indicated; motor thermally protected.

f. Return Air Filter: Washable long-life net filter with mildew proof resin, or replaceable, unlessotherwise indicated.

g. Condensate Drainage: Built-in condensate drain pan with drain connection.

h. Dedicated electronic modulating refrigerant expansion and flow control.

i. Unit must be in accordance with UL 1995 and AHRI 1230.

j. For units with Built-In Condensate Pumps, provide condensate safety shutoff and alarm. For units without Built-In Condensate Pump, provide built in or field supplied overflow protection.

2.3.1 Concealed-In-Ceiling

Units Provide with the following:

a. Ducted horizontal discharge and return; galvanized steel cabinet in accordance with Section 23 30 00 HVAC AIR DISTRIBUTION.

b. Field adjustable external static pressure switch for high efficiency filter operation.

c. Switch box accessible from side or bottom.

2.3.2 Recessed Ceiling

Units Provide with the

following:

a. Four-way airflow cassette with central return air grille, for installation in a fixed ceiling, unless otherwise indicated.

b. Exposed Housing: White, impact resistant, with washable decoration panel.

c. Supply Airflow Adjustment:

(1) Via motorized louvers which can be horizontally and vertically adjusted from 0 to90 degrees.

(2) Field-modifiable to 3-way and 2-way airflow.

2.3.3 Wall Surface-Mounted

Units Provide with the following:

a. Finished white casing, with removable front grille; sound insulation; wall mounting plate; condensate drain pan.

b. Airflow Control: Auto-swing louver that closes automatically when unit stops; adjustable discharge angle, set using remote controller; upon restart, discharge angle defaulting to sameangle as previous operation.

c. Fan: Direct-drive cross-flow type.

d. Condensate Drain Connection: Side (end), not concealed in wall.

2.4 OUTDOOR

COMPRESSOR UNIT

Provide with the following:

a. The outdoor unit must have one or more variable capacity compressors or alternative method resulting in three or more steps of capacity needed to load match the indoor unit fan coils at alltimes.

b. The unit must be factory complete, tested and pre-wired with all necessary electronic andrefrigerant controls.

c. The sound pressure dB(A) at rated conditions must be a value of 58 decibels at 3 feet from thefront of the unit when rated in accordance with ANSI/AHRI 270.

d. The unit must automatically restart normal operation after a power failure of any durationwithout reprogramming or manual assistance.

e. Oil recovery cycle must be automatic occurring a minimum of 2 hours after start of operationand then at least every 8 hours of operation.

f. Each outdoor unit must have it's own dedicated power feed, each with disconnect and mainpower circuit breaker.

g. The unit must be in compliance with ANSI/ASHRAE 15 & 34, factory tested, cleaned, dehydrated, charged, and sealed. Provide refrigerant charging valves.Filter-drier must beprovided in liquid line.

h. The outdoor units capacity must meet or exceed the scheduled value in the contract drawings.The ratio of the outdoor unit capacity to the total connected indoor capacity must bein accordance with the manufacturer's recommendations for selecting the outdoor unit.

i. Unit must be in accordance with UL 1995 and AHRI 1230.

2.4.1 Air-Cooled

The unit must must have full design cooling capacity at 95 degrees F dry bulb ambient.

2.4.2 Casing

Construct the unit of zinc coated, heavy-gage (14-gage minimum) galvanized steel. The cabinet finish shall betested in accordance with ASTM B-117 salt spray surface scratch test (SST) procedure for a minimum of 1000hours. Such documentation shall be included in all submittals. Provide cabinet panels with lifting handles andwater- and air-tight seal. Insulate all exposed vertical panels, top covers and base pan.

2.4.3 Compressor

Each compressor system must have the following:

a. High pressure safety switch, and internal thermal overload protection.

b. Factory installed vibration dampeners on all mounting points.

c. Factory installed crank case heater or other control logic to ensure reliable operation in freezing environments.

d. Oil separator with an oil balance circuit.

2.5 COMPONENTS

2.5.1 Fans

Fan wheel shafts must be supported by either maintenance-accessible lubricated antifriction block-type bearings, or permanently lubricated ball bearings. Unit fans must be selected to produce the flow rate required at the fan total pressure. Motor starters, if applicable, must be magnetic across-the-line type with a totally enclosed enclosure. Thermal overload protection must be of the manual or automatic-reset type. Fan wheels or propellers must be constructed of aluminum or galvanized steel. Centrifugal fan wheel housings must be of galvanized steel, and both centrifugal and propeller fan casings must be constructed of aluminum or galvanized steel. Steel elements of fans, except fan shafts, must be hot-dipped galvanized after fabrication or fabricated of mill galvanized steel. Mill-galvanized steel surfaces and edges damaged or cut during fabrication by forming, punching, drilling, welding, or cutting must be recoated with an approved zinc-rich compound. Fan wheels or propellers must be statically and dynamically balanced. Direct-drive fan motors must be of the multiple-speed variety. Belt-driven fans must have adjustable sheaves. The sheave size must be selected so that the fan speed at the approximate midpoint of the sheave adjustment will produce the specified air quantity. Centrifugal scroll-type fans must be provided with streamlined orifice inlet and V-belt drive. Each drive will be independent of any other drive.

Propeller fans must be direct-drive type with fixed pitch blades. V-belt driven fans must be mounted on a corrosion protected drive shaft supported by either maintenance-accessible lubricated antifriction block-type bearings, or permanently lubricated ball bearings. Each drive will be independent of any other drive. Drive bearings must be protected with water slingers or shields. V-belt drives must be fitted with guards where exposed to contact by personnel and fixed pitch sheaves. Axial fans may not be used to distribute air through duct systems.

2.5.2 Air Filters

High efficiency particulate air (HEPA) filters shall be provided. Filters must have a MERV of 17 when tested in accordance with ASHRAE 52.2. Filter assembly must include; holding frame and fastener assembly, filter cartridge, mounting frame, and retainer assembly. Reinforce filter media with glass fiber mat. Pressure dropacross clean filter shall not exceed 1 inches of water gage.

2.5.3 Internal Dampers

Dampers must be parallel blade type with renewable blade seals and be integral to the unitary unit. Damper provisions must be provided for each outside air intake, exhaust, economizer, and mixing boxes. Dampers musthave manual modulation and operate as specified.

2.5.4 Mixing Boxes

Mixing boxes must match the base unit in physical size and must include equally-sized openings, each capable offull air flow. Arrangement must be as indicated.

2.5.5 Refrigerant Solenoid Valves

Solenoid valves must comply with ANSI/AHRI 760 and UL 429, be suitable for continuous duty rated voltage at maximum and minimum encountered pressure and temperature service conditions. Solenoid valves must be direct-acting or pilot-operating type, packless, seal capped. Manual lifting provisions must be furnished. Solenoid coils must comply with NEMA 250 type 4.

Valves must have safe working pressure of 125 percent of maximum working pressure and a maximum operatingpressure differential of at least half of the valve maximum working pressure at 85 percent rated voltage. Valves must have an operating pressure differential suitable for the fluid phase and refrigerant used.

2.5.6 Branch Selector Unit

Branch Selector port control must be provided for each connected indoor unit to enable individual heating and cooling selection year round unless otherwise indicated in the contract drawings. The cabinet must be galvanized steel. The branch selector units must be factory assembled, wired, piped and run tested.

2.6 EQUIPMENT ACCESSORIES AND MISCELLANEOUS EQUIPMENT

2.6.1 Refrigerant Leak Detector

Provide continuously-operating, halogen-specific type refrigerant leak detector.Detector must be appropriate forthe refrigerant in use.

Detector must be specifically designed for area monitoring and must include a single sampling point installed where indicated. Detector design and construction must be compatible with the temperature, humidity, barometric pressure and voltage fluctuations of the operating area. Detector must have an adjustable sensitivity such that it can detect refrigerant at or above 3 parts per million (ppm). Detector must be supplied factory- calibrated for the appropriate refrigerant(s).Detector must be provided with an alarm relay output which energizeswhen the detector detects a refrigerant level at or above the TLV-TWA (or toxicity measurement consistent therewith) for the refrigerant in use. The detector's relay must be capable of initiating corresponding alarms and ventilation system as indicated on the drawings. Detector must be provided with a failure relay output that energizes when the monitor detects a fault in its operation.

2.6.2 Refrigerant Signs

Refrigerant signs must be a medium-weight aluminum type with a baked enamel finish. Signs must be suitable forindoor or outdoor service. Signs must have a white background with red letters not less than 0.5 inches in height.

2.6.2.1 Installation Identification

Provide each new refrigeration system with a refrigerant sign which indicates the following as a minimum:

a. Contractor's name.

b. Refrigerant number and amount of refrigerant.

c. The lubricant identity and amount.

d. Field test pressure applied.

2.6.2.2 Controls and Piping Identification

Provide refrigerant systems containing more than 110 lb of refrigerant with refrigerant signs which designate thefollowing as a minimum:

a. Valves or switches for controlling the refrigerant flow and the refrigerant compressor.

b. Pressure limiting device(s).

2.6.3 Gaskets

Provide gaskets conforming to ASTM F104 - classification for compressed sheet with nitrile binder and acrylic fibersfor maximum 700 degrees F service.

2.6.4 Bolts and Nuts

Bolts and nuts must be in accordance with ASTM A307. The bolt head must be marked to identify the manufacturer and the standard with which the bolt complies in accordance with ASTM A307.

2.7 FINISHES

2.7.1 Coil Corrosion Protection

Provide coil with a uniformly applied epoxy electrodeposition, phenolic, or vinyl type coating to all coil surfaceareas without material bridging between fins. Submit product data on the type coating selected, the coating thickness, the application process used, the estimated heat transfer loss of the coil, and verification of conformance with the salt spray test requirement. Coating must be applied at either the coil or coating manufacturer's factory. Coating process must ensure complete coil encapsulation. Coating must be capable ofwithstanding a minimum 1,000 hours exposure to the salt spray test specified in ASTM B117 using a 5 percentsodium chloride solution.

2.7.2 Equipment and Components Factory Coating

Unless otherwise specified, equipment and component items, when fabricated from ferrous metal, must be factory finished with the manufacturer's standard finish, except that items located outside of buildings must have weather resistant finishes that will withstand 500 hours exposure to the salt spray test specified in ASTM B117. Immediately after completion of the test, the specimen must show no signs of blistering, wrinkling, cracking, or loss of adhesion and no sign of rust creepage beyond 1/8 inch on either side of the scratch mark. Cut edges of galvanized surfaces where hot-dip galvanized sheet steel is used must be coated with a zinc-rich coating conforming to ASTM D520, Type I.

Where stipulated in equipment specifications of this section, coat finned tube coils of the affected equipment as specified below. Apply coating at the premises of a company specializing in such work. Degrease and prepare for coating in accordance with the coating applicator's procedures for the type of metals involved. Completed coating must show no evidence of softening, blistering, cracking, crazing, flaking, loss of adhesion, or "bridging" between the fins.

2.7.2.1 Phenolic Coating

Provide a resin base thermosetting phenolic coating. Apply coating by immersion dipping of the entire coil. Provide a minimum of two coats. Bake or heat dry coils following immersions. After final immersion and prior to final baking, spray entire coil with particular emphasis given to building up coating on sheared edges. Total dry film thickness must be 2.5 to 3.0 mils.

2.7.2.2 Chemical Conversion Coating with Polyelastomer Finish Coat

Dip coils in a chemical conversion solution to molecularly deposit a corrosion resistant coating by electrolysis action. Cure conversion coating at a temperature of 110 to 140 degrees F for a minimum of 3 hours. Coat coil surfaces with a complex polymer primer with a dry film thickness of 1 mil. Cure primer coat for a minimum of 1 hour. Using dip tank method, provide three coats of a complex polyelastomer finish coat. After each of the firsttwo finish coats, cure the coils for 1 hour. Following the third coat, spray a fog coat of an inert sealer on the coilsurfaces. Total dry film thickness must be 2.5 to 3.0 mils. Cure finish coat for a minimum of 3 hours. Coating

materials must have 300 percent flexibility, operate in temperatures of minus 50 to plus 220 degrees F, andprotect against atmospheres of a pH range of 1 to 14.

2.7.2.3 Vinyl Coating

Apply coating using an airless fog nozzle. For each coat, make at least two passes with the nozzle. Materials to be applied are as follows:

a. Total dry film thickness, 6.5 mils maximum

b. Vinyl Primer, 24 percent solids by volume: One coat 2 mils thick

c. Vinyl Copolymer, 30 percent solids by volume: One coat 4.5 mils thick

2.7.3 Factory Applied Insulation

Refrigeration equipment must be provided with factory installed insulation on surfaces subject to sweating including the suction line piping. Where motors are the gas-cooled type, factory installed insulation must be provided on the cold-gas inlet connection to the motor in accordance with manufacturer's standard practice. Factory insulated items installed outdoors are not required to be fire-rated. As a minimum, factory insulated items installed indoors must have a flame spread index no higher than 75 and a smoke developed index no higher than 150. Factory insulated items (no jacket) installed indoors and which are located in air plenums, in ceiling spaces, and in attic spaces must have a flame spread index no higher than 25 and a smoke developed index no higher than 50. Flame spread and smoke developed indexes must be determined by ASTM E84.

Insulation must be tested in the same density and installed thickness as the material to be used in the actual construction. Material supplied by a manufacturer with a jacket must be tested as a composite material.

Jackets, facings, and adhesives must have a flame spread index no higher than 25 and a smoke developed index no higher than 50 when tested in accordance with ASTM E84.

2.8 TESTS, INSPECTIONS, AND VERIFICATIONS

All manufactured units must be inspected and tested, and documentation provided to demonstrate that each unit is in compliance with applicable ANSI/AHRI and UL requirements and that the minimum efficiency requirements ofASHRAE 90.1 - SI ASHRAE 90.1 - IP have been met.

EXHIBIT B

UOG BID NO. B21-

17

PURCHASING OF HVAC EQUIPMENT OF THE UNIVERSITY OF GUAM

Scope of Work

3. Scope of the Work

This bid is to select and award a contract for the purchasing of multiple Air Conditioning units for the University of Guam.

4. Bid Submittals

a) Bid prices shall be submitted on Bid Price Form. All prices shall include shipping, delivery,and manufacturer's warranty. Any additional cost not stated in this bid but are required to complete the delivery and installation must be included in the bidder's price.

b) Bidder shall submit an electronic copy to the Share folder that UOG procurement officeprovides.

Contractor is required to submit prices for Table 1.0.
Bid award to be based on the required items in Table 1.0 and to be based on price, compliance to the specification, services, delivery and any requirements in the BID package, BID NO. B21-17.

Table 1.0 Bid Price Form

No.	ITEM DESCRIPTION					BID Price
1	LOCATION	UNIT	TONS	VOLTAGE	TVX	
	RFK BUILDING SECOND FLOOR	1	50	208 / 230	2 EA. - 25	
	RFK BUILDING FIRST FLOOR	1	40	208 / 230	2 EA. -	
	20RFK BUILDING FIRST FLOOR MAIN ENTRANCE	1	15	208 / 230	2 EA. -	
	7.5RFK BUILDING FIRST FLOOR AV ROOM	1	15	208 / 230	2 EA. -	
	7.5RFK BUILDING FIRST FLOOR OFFICES	1	20	208 / 230	2 EA. - 10	
	PIP (GLE) SECOND FLOOR	1	20	208 / 230	2 EA. -	
	10SCIENCE BUILDING FIRST FLOOR	1	40	208 / 230	2 EA. -	
	20SCIENCE BUILDING SECOND FLOOR	1	40	208 / 230	2 EA. -	
	20SCIENCE BUILDING THIRD FLOOR	1	20	208 / 230	2 EA. -	
	10EGLISH COMMUNICATION BUILDING CLASSROO	1	30	208 / 230	2 EA. -	
	15COMPUTER CENTER OIT					

	BUILDING FIRST FLOOR	1	50	277 / 460	2 EA. - 25	
	LECTURE HALL AUDITORIUM	1	20	277 / 460	2 EA. - 10	
	MARINE LAB FIRST FLOOR	2	10	208 / 230	2 EA. - 5	
	MARINE LAB SECOND FLOOR	2	10	208 / 230	2 EA. – 5	
	HSS BUILDING	2	50	277 / 460	2 EA. – 25	
	HSS BUILDING	1	30	277 / 460	2 EA. – 15	
Grand Total						
Delivery:_____weeks after receipt of purchase order						

OPTIONS

Signature of Bidder Date

For Table 2.0 Options, the bidder's price will not be included as part of the total price evaluation for this bid award. UOG reserves the right to excercise any or part of the options requested. Insert any additional options recommended.

Table 2.0 Options

No.	Item Description	Price
1	Services for Maintenance and upkeep.	
2	Services for disposal.	
3	Replacement/trade in program	

OTHER NOTES:

3. These specifications have been written to describe minimum equipment and performance requirements to be supplied by the equipment manufacturer bidding. Reasonable tests may be conducted upon delivery before acceptance.

4. The University reserves the right to accept and/or reject any and all bids, to waive any defects, irregularities, or specification discrepancies and to award the bid deemed to be in the best interest of the University.

NOTE: Name and title of author of specifications:

University of Guam

Glenn Leon Guerrero, Director, Facilities Mangement & Services, Email: glennlg@triton.uog.edu

Emily Gumataotao, Supply Management Administrator, Email: eggumataotao@triton.uog.edu

RFP Bid No. B21-17 Purchasing HVAC Units for UOG

Final Audit Report 2021-09-21

Created:	2021-09-20
By:	Christine Mabayag (ckamm@triton.uog.edu)
Status:	Signed
Transaction ID:	CBJCHBCAABAAzUx-kIK9Deq03XlQUjZkxKXFD19oThSg

"RFP Bid No. B21-17 Purchasing HVAC Units for UOG" History

Document created by Christine Mabayag (ckamm@triton.uog.edu)
2021-09-20 - 10:28:42 PM GMT- IP address: 168.123.224.54

Document emailed to Mike Naholowaa (naholomw@bankofguam.com) for signature
2021-09-20 - 10:33:08 PM GMT

Email viewed by Mike Naholowaa (naholomw@bankofguam.com)
2021-09-21 - 0:53:39 AM GMT- IP address: 64.86.75.253

Document e-signed by Mike Naholowaa (naholomw@bankofguam.com)
Signature Date: 2021-09-21 - 0:57:12 AM GMT - Time Source: server- IP address: 64.86.75.253

Document emailed to Liza Provido (ptjarchitects@yahoo.com) for signature
2021-09-21 - 0:57:15 AM GMT

Email viewed by Liza Provido (ptjarchitects@yahoo.com)
2021-09-21 - 1:25:07 AM GMT- IP address: 69.147.90.190

Document e-signed by Liza Provido (ptjarchitects@yahoo.com)
Signature Date: 2021-09-21 - 1:34:09 AM GMT - Time Source: server- IP address: 114.142.234.197

Agreement completed.
2021-09-21 - 1:34:09 AM GMT

UNIVERSITY OF GUAM
UNIBETSEDÅT GUÅHAN

ADMINISTRATION & FINANCE
Consolidated Procurement Office

AMENDMENT 1

Invitation for Bid (IFB)
UOG IFB No. B21-17

Date Issued: October 29, 2021

PURCHASING OF HVAC EQUIPMENT

This is to notify all prospective offerors of the following amendment:

1.1 **PRE-BID Conference and Site visit is scheduled for Wednesday, November 3, 2021 at 10:00am. Meet-up will be at Facilities Maintenance Services, 1st Floor Bay. Please contact 735-2377 for directions.**

All other terms and conditions remain the same.

Emily G. Gumataotao
Supply Management Administrator

Please acknowledge receipt and email: uog.bids@triton.uog.edu:

Name of company: _____

_____
Print Name/Signature/date

T: +1 671.735.2925 F: +1 671.735.3010 W: www.uog.edu E: uog.bids@triton.uog.edu
Mailing Address: 303 University Drive UOG Station Mangilao, Guam 96913

UNIVERSITY OF GUAM
UNIBETSEDÅT GUÅHAN

ADMINISTRATION & FINANCE
Consolidated Procurement Office

AMENDMENT 2

Invitation for Bid (IFB)
UOG IFB No. B21-17

Date Issued: October 29, 2021

PURCHASING HVAC EQUIPMENT

This is to notify all prospective offerors of the following amendment set forth below:

1.1 **REPLACE** **"Cover Page"** with corrected form as set forth in the attached.
1.2 **ADD:** *after* Cover Page, p.2 **"Bidders Registry"** with corrected form as set forth in the attached.
1.3 **REPLACE** **"Table of Contents"** with corrected form as set forth in the attached.
1.4 **REPLACE** **"Instructions to Bidders"** with corrected forms as set forth in the attached.
1.5 **ADD:** *after* ATTACHMENT I, "Register of Wage Determinations Under The Service Contract Act"
1.6 **REPLACE** Exhibit B "Bid Price Form" with corrected forms as set forth in the attached.

All other terms and conditions remain the same.

Emily G. Gumataotao
Supply Management Administrator

Please acknowledge receipt and email: **uog.bids@triton.uog.edu:**

Name of company: _____

_____
Print Name/Signature/date

T: +1 671.735.2925 F: +1 671.735-3010 W: www.uog.edu E: uog.bids@triton.uog.edu
Mailing Address: 303 University Drive UOG Station Mangilao, Guam 96913

UNIVERSITY OF GUAM
UNIBETSEDÅT GUÅHAN

ADMINISTRATION & FINANCE
Consolidated Procurement Office

INVITATION FOR BID (IFB)
UOG BID NO. B21-17

The University of Guam is soliciting sealed bids for the PURCHASING OF HVAC EQUIPMENT For The University of Guam

Copies of the Bid Package and Instructions and Information may be obtained from:

OFFICE:	UOG Procurement Office
TELEPHONE:	(671) 735-2925
FAX NO.:	(671) 735-3010
LOCATION:	UOG Administration Building (ANNEX BUILDING) Mangilao, Guam
E-MAIL:	uog.bids@triton.uog.edu

A non-refundable fee of $25.00 is required to obtain a hard copy of the bid package. Payment may be made via cash, check or credit card at the UOG Business Office, Cashier Services located at the UOG Administration Building Mon-Fri from 8 am - 4 pm. Pay by phone is available from 8 am - 4 pm. You may schedule an appointment with our cashier services at 735-2923/45/46, please reference Bid number and title when making payment. Send proof of receipt to the Procurement Office.

In accordance with 5 G.C.A. §5220(a), a digital copy of this solicitation shall be posted on UOG's website at uog.bids@triton.uog.edu. No fees shall be assessed to potential bidders or other parties for accessing or downloading a copy of this solicitation from UOG's website. Potential bidders who access or download a copy of this solicitation from UOG's website must register their contact information with UOG to ensure that they receive any notices regarding any changes or updates to this solicitation. In accordance with 5 G.C.A. §5220(b), UOG shall not be liable for failure to provide notice to any party who accesses or downloads a copy of this solicitation from UOG's website and who fails to register their contact information with UOG as required herein. Please have subject line reference as indicated the *UOG Bid number, Bid Title, and your Company or Requestor's Name to register for UOG's Bid Distribution Registry.*

<u>Deadline for Submission</u> of Bid Packages is on Monday, November 22, 2021 on or before 2:00 P.M. via electronic submission to electronic Bid Share folder provided by UOG Procurement Office.

/s/ Thomas W. Krise, Ph.D.
President

University of Guam is an equal opportunity employer and provider.
This Advertisement is paid for by University of Guam Funds.

AUTHORIZED FOR ANNOUNCEMENT

Thomas W. Krise, Ph.D. President

UNIVERSITY OF GUAM
UNIBETSEDÅT GUÅHAN

ADMINISTRATION & FINANCE
Consolidated Procurement Office

UOG BIDDERS DISTRIBUTION REGISTRY FORM FOR UOG BID NO. B21-17

INFORMATION ON INTERESTED BIDDER FOR BID REGISTRY ENTRY MUST BE RECEIVED BY UOG'S PROCUREMENT OFFICE PRIOR TO RECEIVING ANY DISTRIBUTED COPY SET OF THIS IFB (WITH OR WITHOUT THE BID FEE)

NOTICE:

ALL DISTRIBUTIONS OF THIS BID PACKET MUST BE RECORDED IN THE BID'S REGISTRY (LOG) AT UOG'S CONSOLIDATED PROCUREMENT OFFICE.

THE BID REGISTRY ALSO PROVIDES THE NECESSARY CONTACT INFORMATION NEEDED TO DISTRIBUTE FUTURE AMENDMENTS, ADDENDUMS, AND CLARIFICATIONS FOR THIS BID PACKET.

UOG PAYMENT RECEIPT NO. _____ DATE: ___/___/___ TIME: _____

PAYMENT METHOD: [ ] CASH [ ] CHECK NO. _____ [ ] CREDIT CARD _____

NAME OF COMPANY: _____

PHYSICAL ADDRESS: _____

MAILING ADDRESS: _____

CONTACT PERSON & TITLE: _____

CONTACT NUMBERS: TELEPHONE _____ FAX _____ CELLULAR _____

E-MAIL ADDRESS: _____

OTHER CONTACT INFORMATION OR HELPFUL INSTRUCTIONS FOR UOG WHEN FORWARDING FUTURE UPDATES:

UNIVERSITY OF GUAM - CONSOLIDATED PROCUREMENT OFFICE
UOG Station, Mangilao, Guam 96923 Tel. (671) 735.2925 Fax. (671) 735.3010

UNIVERSITY OF GUAM
UNIBETSEDÅT GUÅHAN

ADMINISTRATION & FINANCE
Consolidated Procurement Office

TABLE OF CONTENTS

UNIVERSITY OF GUAM
UNIBETSEDÅT GUÅHAN

ADMINISTRATION & FINANCE
Consolidated Procurement Office

UNIVERSITY OF GUAM
INVITATION FOR BID UOG BID NO. B21-17
PURCHASING OF HVAC EQUIPMENT FOR THE UNIVERSITY OF GUAM

DATE ISSUED: October 22, 2021

UOG SECTION: FACILITIES MANAGEMENT & SERVICES (FMS), ADMINISTRATION & FINANCE

ISSUED BY: UOG CONSOLIDATED PROCUREMENT OFFICE
TELEPHONE NO.: (671) 735-2925 FAX NO.: (671) 735-3010
E-MAIL: uog.bids@triton.uog.edu

INSTRUCTIONS TO BIDDERS

1. RECEIPT AND OPENING OF BIDS: Sealed bids for UOG **B21-17** PURCHASING OF HVAC EQUIPMENT FOR THE UNIVERSITY OF GUAM (UOG) must be received by the Procurement Office nolater than:

   TIME: 2:00 P.M. DATE: Monday, November, 22,2021

   Bids submitted after the time and date specified above shall be rejected. Bid opening will be conducted electronically via Zoom Link at 4:00 pm; link will be provided through email to all registered offerors.

   Attention is called to the fact that bidders not only offer to assume the obligations and liabilities imposed upon the contractor in the form of a contract, but are expressly made certain of the representations and warrants made herein. No effort is made to emphasize any particular provision of the contract, but biddersmust familiarize themselves with every provision and its effect. This Bid is subject to **General Terms and Conditions of the Invitation for Sealed Bids (Attachment A) and the Special General Provisions (Attachment B).**

   In consideration of the expense of the University of Guam of opening, tabulating, and evaluating this and other bids, and other considerations, the undersigned agrees that this bid shall remain firm and irrevocablewithin sixty (60) calendar days from the date of opening to supply any or all of items for which prices are quoted.

2. BIDDER QUALIFICATIONS (Attachment C): The University of Guam may require bidders to presentsatisfactory evidence that they have sufficient experience and that they are fully prepared, thus it is required that the bidder completely fill out the Bidder's Qualifications Form.

3. NON-COLLUSION AFFIDAVIT (Attachment D): Each person submitting a bid for any portion of the work covered by the bidding documents shall execute an affidavit, in the form provided with the Bid to theeffect that he has not colluded with any other person, firm or corporation in regard to any bid submitted. Such affidavit shall be attached to the proposal.

4. MAJOR SHAREHOLDERS AFFIDAVIT (Attachment E): As a condition to submitting of bids or proposals, any partnership, sole proprietorship or corporation doing business with the University of Guam shall submit an affidavit that lists the name and address of any person who has held more than ten percent (10) of outstanding shares in said partnership, sole proprietorship or corporation at any time during the twelve (12) month period immediately preceding submission of a proposal. The affidavit shall contain thenumber of shares or the percentage of all assets of such partnership, sole proprietorship or corporation which have been held by each person during the twelve (12) month period. In addition, the affidavit shall contain the name and address of any person who has received or is entitled to receive a commission, gratuity or other compensation for the procuring or assisting in obtaining business related to the bid or proposal for the Offeror and shall contain the amounts of any shall commission, gratuity or other compensation. The affidavit shall be open and available for inspection and copying.

5. AFFIDAVIT RE GRATUITIES, KICKBACKS AND FAVORS (Attachment G): The bidder, offeror or contractor represents that it will not violate the prohibition against gratuities and kickbacks and favors set forth (Gratuities and Kickbacks) in 5 GCA, Chapter 5, Article 11, Ethics in Public Contracting and Section 11.7 (Gratuities and Kickbacks and Favors) of the UOG Procurement Manual.

6. AFFIDAVIT RE ETHICAL STANDARDS (Attachment H): The bidder, offeror, or contractor representsthat it has not knowingly influenced and promises that it will not knowingly influence a government employee to breach any of the ethical standards set forth in 5 GCA, Chapter 5, Article 11, and in Chapter 11 (Ethics in Public Contracting) of the UOG Procurement Manual.

7. COVENANT AGAINST CONTINGENT FEES (Attachment I): The prospective contractor represents aspart of such contractor's bid or proposal that such contractor has/has not (Circle applicable word or words) retained any person or agency on a percentage, commission, or other contingent arrangement, except for retention of bona fide employees or bona fide established commercial selling agencies for the purpose of securing business.

8. DECLARATION RE COMPLIANCE WITH U.S. DEPARTMENT OF LABOR WAGE DETERMINATION (Attachment J): In accordance with 5 GCA §§ 5801 and 5802, as may be applicable, each bidder certifies that any of its employees whose purpose, in whole or in part, is the direct delivery of service contracted by the University shall be paid in accordance with the Wage Determination for Guam and the Northern Mariana Islands issued and promulgated by the U.S. Department of Labor for such labor as is employed in the direct delivery of contract deliverables to the University, including health and other similar benefits. Theupdated wage rate with the most current revision shall be included in the bid submission.

9. RIGHT TO ACCEPT AND REJECT BIDS: The President of the University of Guam reserves the unqualified right, in his sole and absolute discretion, to reject any and all bids, or to accept that bid or combination of bids, if any, which in his sole and absolute judgment will under all circumstances best servethe interests of the University of Guam. In the event that the successful bidder fails to execute the contract upon his part or to furnish a satisfactory performance and payment bond, the University, after declaring thesecurity deposit of such bidder forfeited, reserves the option to accept the bid of any other bidder within ten (10) days from such default, in which case such acceptance shall have the same effect as to such bidderas though he was the originally successful bidder.

10. MODIFICATIONS PRIOR TO DATE SET FOR OPENING BIDS: The University reserves the right to revise or amend the specifications prior to the date set for opening bids. Such revisions and amendments, ifany, will be announced by an amendment or amendments to this Invitation for Bids and shall be identified as such. It is required that the bidders acknowledge in writing receipt of all amendments issued and such acknowledgment must be included in the bid. The

amendment shall refer to the portions of the Invitation forBids it amends. Amendments shall be sent to all prospective Bidders known to have received an Invitation for Bids. Amendments shall be distributed within a reasonable time to allow prospective Bidders to considerthe amendment in preparing their Bids. If the time and date set for receipt of bids will not permit such preparation, such time shall be increased to the extent possible in the amendment or, if necessary, by email or telephone and confirmed in the amendment.

11. CANCELLATION OF SOLICITATION: Prior to the date set for opening bids, a solicitation may be cancelled in whole or in part when the President or his designee determines in writing that the cancellation of the solicitation is in the University's best interest, in accordance with the University's Procurement Rulesand Regulations.

12. METHOD OF AWARD: Bid shall be awarded to the [x] lowest, [ ] highest, responsible and responsive bidder whose bid meets the requirements and criteria set forth in the Invitation for Bids. A responsible bidder is one who has the capability in all respects to perform fully the contract requirements, and the integrity and reliability which will assure good faith performance. A responsive bidder is one who has submitted a bid which conforms in all material respects to the Invitation for Bids. The University reserves the right to waive any minor information of irregularity in Bids received. The President shall have the authority to award or reject Bids, in whole or in part for any one or more items if he determines it is in the public interest.

Award issued to the [x] lowest, [ ] highest, responsible and responsive bidder within the specified time foracceptance as indicated in the Bid, results in a binding contract without further action by either party provided the successful bidder executes a formal contract with the University. In case of any error in the extension of prices, unit price will govern. It is the policy of the Government of Guam to award Bids to qualified local vendors.

13. SUBMISSION OF BIDS:

a. Bids and modifications thereof shall be submitted through electronic submission to the Share folder that UOG procurement office provides and addressed to the office specified in the Solicitation. The electronic file submission will show the hour and date of submission as specifiedin the Solicitation for receipt. The file should identify the Solicitation number, and the name of the bidder.

b. Bids may be modified or withdrawn by written or telegraphic notice, provided such notice is received prior to the hour and date specified for receipt (see paragraph 9 of these instructions).

c. Samples of items, when required, must be submitted within the time specified, unless otherwise specified by the University, at no expense to the University. If not destroyed by testing, sampleswill be returned at bidder's request and expense, unless otherwise specified by the Solicitation.

d. Samples or descriptive literature should not be submitted unless it is required on this Solicitation. Regardless of any attempt by a bidder to condition the bid, unsolicited samples or descriptive literature will not be examined or tested at the bidder's risk, and will not be deemed to vary any ofthe provisions of this Solicitation.

14. FAILURE TO SUBMIT BID: If no bid is to be submitted, do not return the Solicitation unless otherwise specified. A letter or postcard shall be sent to the issuing office advising whether future Solicitations for the type of supplies or services covered by this Solicitation is desired.

15. PRE-BID CONFERENCES. Pre-Bid conferences will be permitted any time prior to the date establishedherein for submission of bid. The conferences will be conducted only to explain the procurement requirements for this Request for Proposal. The Authority will notify all Bidders of any substantive clarification provided in response to any inquiry. The Authority will extend the due date if such information significantly amends the solicitation or makes compliance with the original proposed due date impractical.

16. BID PACKET. The prospective bidder is required to read each and every page of the Bid Packet and bythe act of submitting a proposal shall be deemed to have accepted all conditions contained therein. In no case will failure to inspect constitute grounds for claim or for the withdrawal of a bid after opening. Bid submission shall be sent electronically. Erasures or other changes in a bid must be explained or noted over the signature of the offeror. Bid submission containing any conditions, omissions, unexplained erasure or alterations or items not called for in the Bid packet, or irregularities of any kind may be rejected by the University as being incomplete.

17. BID PACKET FORM. A non-refundable fee of **$25.00 (U.S.)** shall be charged for each hard copy or CD ROM bid packet. All payments shall be made by cash, certified check or money order to the University of Guam. Cashier services are located at the UOG Administration Building Mon-Fri from 8am-4pm by appointment only. Payby phone is also available from 8am-4pm at 735-2923/45/46.

18. NOTICE OF AWARD. UOG will notify all bidders the status of the Bid and Notice of Award. Written notice of award will be public information and made a part of the contract file.

19. LOCAL PROCUREMENT PREFERENCE: "All procurement of supplies and services shall be made from among businesses licensed to do business on Guam in accordance with Guam Code Annotated Title 5 Chapter 5 Section 5008 and Section 3.9.14.5, UOG Procurement Regulation."

20. BIODEGRADABLE, REUSEABLE, RECYCLABLE MATERIALS: Section 1.5, UOG Procurement Regulations. UOG's President or his designee, whenever possible, shall procure products that are biodegradable, reusable, recyclable, or made of recycled material, or any of these in any combination. The cost (prior to any adjustments for local vendors) of appropriate biodegradable, reusable, recyclable, or recycled products may be as much as ten percent (10%) greater than the cost of the non-biodegradable, non-reusable, non-recyclable, or non- recycled products they are replacing.

21. SERVICE-DISABLED VETERAN PREFERENCE: UOG will award the contract for this solicitation to bidders that are business concerns that are at least fifty-one-percent (51%) owned by a service-disabled veteran(s) who served in the active U.S. military: (1) Who was discharged or released under honorable conditions and whose disability is service-connected as demonstrated by a DD Form 214, and certified by an award letter from the U.S. Department of Veterans Affairs; (2) That submitted the DD Form 214 and Disability award letter from the U.S. Department of Veterans Affairs with their bid submitted in response to this solicitation; (3) The service-disabled veteran(s) owner of the business concern has filed individual tax returns on Guam for a period of at least three (3) consecutive years; (4) The business concern is licensed to do business on Guam; (5) The business concern maintains its headquarters on Guam; (6) the supply or service offered by the business concern is available within the period required by UOG; and (7) The price for the supply or service does not exceed one-hundred-five-percent (105%) of the lowest price bidder. The Service-Disabled Veteran Preference is given in addition to any other procurement benefit the service-disabled veteran owned business may qualify for under Guam law.

22. WOMEN OWNED BUSINESS PREFERENCE: UOG will award the contract for this solicitation to bidders that are business concerns that are at least fifty-one-percent (51%) owned by women, who manage day-to-day operations and make long-term decisions, and: (1) The owner(s) of the business concern has filed individual tax returns on Guam for a period of at least three (3) consecutive years; (2) The business concern is licensed to do business on Guam; (3) The business concern maintains its headquarters on Guam; (4) the supply or service offered by the business concern is available within the period required by UOG; (5) The business concern is certified as a Women-Owned Small business (WOSB) or an Economically Disadvantaged Women-Owned Small Business (EDWOSB) by the U.S. Small Business Administration; and (6) The price for the supply or service does not exceed one-hundred-five-percent (105%) of the lowest price bidder. The Women Owned Business Preference is given in addition to any other procurement benefit the women owned business may qualify for under Guam law.

23. DETERMINING LOWEST PRICE IF BIDDERS CLAIM PREFERENCES. In accordance with 5 G.C.A. §5013(a), UOG shall determine the lowest price in the case of more than one (1) women-owned business, or a women-owned business and a service-disabled veteran owned business, who are competing for the same government contract.

24. MULTIPLE OR ALTERNATIVE BIDS. UOG shall not accept any multiple or alternative bid and shall reject any multiple or alternate bids its received. However, if a bidder clearly indicates a base bid, such base bid shall be considered for award as though it were the only bid submitted by the bidder. If UOG is not able to distinguish which bid is the base bid, it will reject all the multiple or alternative bids submitted by the bidder.

25. MULTI-TERM CONTRACT. If a multi-term contract is awarded for this solicitation, the amount of supplies or services stated on the bid price form of this solicitation shall be the amount of supplies or services required for the proposed contract period and the unit prices given by the bidder awarded the contract shall be the same throughout the multi-term contract period, except to the extent that price adjustments may be provided in this solicitation and the resulting contract, and UOG may cancel, after giving timely notice to the contractor, the multi-term contract if funds are not appropriated or otherwise made available to support continuation of performance in any fiscal period succeeding the first. However, this will not effect either UOG's rights or the contractor's rights under any termination clause in the contract. If the contract is canceled, the contractor will be reimbursed the unamortized, reasonably incurred, nonrecurring costs.

"REGISTER OF WAGE DETERMINATIONS UNDER THE SERVICE CONTRACT ACT
By direction of the Secretary of Labor

U.S. DEPARTMENT OF LABOR
EMPLOYMENT STANDARDS ADMINISTRATION
WAGE AND HOUR DIVISION
WASHINGTON D.C. 20210

Daniel W. Simms
Director

Division of
Wage Determinations

Wage Determination No.: 2015-5693
Revision No.: 13
Date Of Last Revision: 08/04/2021

Note: Under Executive Order (EO) 13658 an hourly minimum wage of $10.95 for calendar year 2021 applies to all contracts subject to the Service Contract Act for which the contract is awarded (and any solicitation was issued) on or after January 1 2015. If this contract is covered by the EO the contractor must pay all workers in any classification listed on this wage determination at least $10.95 per hour (or the applicable wage rate listed on this wage determination if it is higher) for all hours spent performing on the contract in calendar year 2021. The EO minimum wage rate will be adjusted annually. Additional information on contractor requirements and worker protections under the EO is available at www.dol.gov/whd/govcontracts.

States: Guam Northern Marianas Wake Island

Area: Guam Statewide

Northern Marianas Statewide

Wake Island Statewide

Fringe Benefits Required Follow the Occupational Listing

OCCUPATION CODE - TITLE	FOOTNOTE	RATE
01000 - Administrative Support And Clerical Occupations		
01011 - Accounting Clerk I		13.57
01012 - Accounting Clerk II		15.23
01013 - Accounting Clerk III		17.04
01020 - Administrative Assistant		21.43
01035 - Court Reporter		17.40
01041 - Customer Service Representative I		11.51
01042 - Customer Service Representative II		12.94
01043 - Customer Service Representative III		14.12
01051 - Data Entry Operator I		12.15
01052 - Data Entry Operator II		13.25
01060 - Dispatcher Motor Vehicle		17.39
01070 - Document Preparation Clerk		13.85
01090 - Duplicating Machine Operator		13.85
01111 - General Clerk I		10.35
01112 - General Clerk II		11.29
01113 - General Clerk III		12.68
01120 - Housing Referral Assistant		19.39
01141 - Messenger Courier		11.37
01191 - Order Clerk I		12.57
01192 - Order Clerk II		13.71
01261 - Personnel Assistant (Employment) I		15.95
01262 - Personnel Assistant (Employment) II		17.85
01263 - Personnel Assistant (Employment) III		19.89
01270 - Production Control Clerk		21.78
01290 - Rental Clerk		11.10

01300 - Scheduler Maintenance	15.55
01311 - Secretary I	15.55
01312 - Secretary II	17.40
01313 - Secretary III	19.39
01320 - Service Order Dispatcher	15.40
01410 - Supply Technician	21.43
01420 - Survey Worker	16.96
01460 - Switchboard Operator/Receptionist	10.36
01531 - Travel Clerk I	13.01
01532 - Travel Clerk II	14.12
01533 - Travel Clerk III	15.09
01611 - Word Processor I	14.53
01612 - Word Processor II	16.31
01613 - Word Processor III	18.26
05000 - Automotive Service Occupations	
05005 - Automobile Body Repairer Fiberglass	15.46
05010 - Automotive Electrician	14.52
05040 - Automotive Glass Installer	13.58
05070 - Automotive Worker	13.58
05110 - Mobile Equipment Servicer	11.65
05130 - Motor Equipment Metal Mechanic	15.46
05160 - Motor Equipment Metal Worker	13.58
05190 - Motor Vehicle Mechanic	15.46
05220 - Motor Vehicle Mechanic Helper	10.66
05250 - Motor Vehicle Upholstery Worker	12.64
05280 - Motor Vehicle Wrecker	13.58
05310 - Painter Automotive	14.52
05340 - Radiator Repair Specialist	13.58
05370 - Tire Repairer	12.67
05400 - Transmission Repair Specialist	15.46
07000 - Food Preparation And Service Occupations	
07010 - Baker	10.47
07041 - Cook I	13.26
07042 - Cook II	15.46
07070 - Dishwasher	9.31
07130 - Food Service Worker	9.45
07210 - Meat Cutter	12.13
07260 - Waiter/Waitress	9.27
09000 - Furniture Maintenance And Repair Occupations	
09010 - Electrostatic Spray Painter	18.04
09040 - Furniture Handler	10.95
09080 - Furniture Refinisher	18.04
09090 - Furniture Refinisher Helper	13.27
09110 - Furniture Repairer Minor	15.70
09130 - Upholsterer	18.04
11000 - General Services And Support Occupations	
11030 - Cleaner Vehicles	9.35
11060 - Elevator Operator	9.54
11090 - Gardener	13.00
11122 - Housekeeping Aide	9.54
11150 - Janitor	9.54
11210 - Laborer Grounds Maintenance	9.82
11240 - Maid or Houseman	9.32
11260 - Pruner	8.79
11270 - Tractor Operator	11.90
11330 - Trail Maintenance Worker	9.82
11360 - Window Cleaner	10.66
12000 - Health Occupations	
12010 - Ambulance Driver	18.23
12011 - Breath Alcohol Technician	18.23
12012 - Certified Occupational Therapist Assistant	25.01
12015 - Certified Physical Therapist Assistant	25.01
12020 - Dental Assistant	16.32
12025 - Dental Hygienist	36.12
12030 - EKG Technician	25.99

12035 - Electroneurodiagnostic Technologist		25.99
12040 - Emergency Medical Technician		18.23
12071 - Licensed Practical Nurse I		16.30
12072 - Licensed Practical Nurse II		18.23
12073 - Licensed Practical Nurse III		20.32
12100 - Medical Assistant		12.26
12130 - Medical Laboratory Technician		18.82
12160 - Medical Record Clerk		13.61
12190 - Medical Record Technician		17.77
12195 - Medical Transcriptionist		16.30
12210 - Nuclear Medicine Technologist		40.06
12221 - Nursing Assistant I		11.34
12222 - Nursing Assistant II		12.75
12223 - Nursing Assistant III		13.91
12224 - Nursing Assistant IV		15.61
12235 - Optical Dispenser		18.23
12236 - Optical Technician		16.30
12250 - Pharmacy Technician		15.49
12280 - Phlebotomist		16.30
12305 - Radiologic Technologist		25.33
12311 - Registered Nurse I		23.18
12312 - Registered Nurse II		28.36
12313 - Registered Nurse II Specialist		28.36
12314 - Registered Nurse III		34.32
12315 - Registered Nurse III Anesthetist		34.32
12316 - Registered Nurse IV		41.13
12317 - Scheduler (Drug and Alcohol Testing)		22.58
12320 - Substance Abuse Treatment Counselor		22.58
13000 - Information And Arts Occupations		
13011 - Exhibits Specialist I		21.20
13012 - Exhibits Specialist II		26.27
13013 - Exhibits Specialist III		32.13
13041 - Illustrator I		21.20
13042 - Illustrator II		26.27
13043 - Illustrator III		32.13
13047 - Librarian		29.09
13050 - Library Aide/Clerk		16.88
13054 - Library Information Technology Systems Administrator		26.27
13058 - Library Technician		16.64
13061 - Media Specialist I		18.96
13062 - Media Specialist II		21.20
13063 - Media Specialist III		23.63
13071 - Photographer I		18.96
13072 - Photographer II		21.20
13073 - Photographer III		26.27
13074 - Photographer IV		32.13
13075 - Photographer V		38.88
13090 - Technical Order Library Clerk		21.20
13110 - Video Teleconference Technician		18.96
14000 - Information Technology Occupations		
14041 - Computer Operator I		15.71
14042 - Computer Operator II		17.22
14043 - Computer Operator III		19.19
14044 - Computer Operator IV		21.33
14045 - Computer Operator V		23.62
14071 - Computer Programmer I	(see 1)	15.73
14072 - Computer Programmer II	(see 1)	19.50
14073 - Computer Programmer III	(see 1)	23.84
14074 - Computer Programmer IV	(see 1)	
14101 - Computer Systems Analyst I	(see 1)	24.23
14102 - Computer Systems Analyst II	(see 1)	
14103 - Computer Systems Analyst III	(see 1)	
14150 - Peripheral Equipment Operator		15.71
14160 - Personal Computer Support Technician		21.33

14170 - System Support Specialist	21.24
15000 - Instructional Occupations	
15010 - Aircrew Training Devices Instructor (Non-Rated)	24.23
15020 - Aircrew Training Devices Instructor (Rated)	29.32
15030 - Air Crew Training Devices Instructor (Pilot)	34.91
15050 - Computer Based Training Specialist / Instructor	24.23
15060 - Educational Technologist	27.61
15070 - Flight Instructor (Pilot)	34.91
15080 - Graphic Artist	20.47
15085 - Maintenance Test Pilot Fixed Jet/Prop	34.91
15086 - Maintenance Test Pilot Rotary Wing	34.91
15088 - Non-Maintenance Test/Co-Pilot	34.91
15090 - Technical Instructor	17.67
15095 - Technical Instructor/Course Developer	23.78
15110 - Test Proctor	15.70
15120 - Tutor	15.70
16000 - Laundry Dry-Cleaning Pressing And Related Occupations	
16010 - Assembler	10.12
16030 - Counter Attendant	10.12
16040 - Dry Cleaner	11.56
16070 - Finisher Flatwork Machine	10.12
16090 - Presser Hand	10.12
16110 - Presser Machine Drycleaning	10.12
16130 - Presser Machine Shirts	10.12
16160 - Presser Machine Wearing Apparel Laundry	10.12
16190 - Sewing Machine Operator	12.04
16220 - Tailor	12.52
16250 - Washer Machine	10.60
19000 - Machine Tool Operation And Repair Occupations	
19010 - Machine-Tool Operator (Tool Room)	19.46
19040 - Tool And Die Maker	24.46
21000 - Materials Handling And Packing Occupations	
21020 - Forklift Operator	13.96
21030 - Material Coordinator	21.78
21040 - Material Expediter	21.78
21050 - Material Handling Laborer	11.37
21071 - Order Filler	9.76
21080 - Production Line Worker (Food Processing)	13.96
21110 - Shipping Packer	17.12
21130 - Shipping/Receiving Clerk	17.12
21140 - Store Worker I	15.22
21150 - Stock Clerk	21.40
21210 - Tools And Parts Attendant	13.96
21410 - Warehouse Specialist	13.96
23000 - Mechanics And Maintenance And Repair Occupations	
23010 - Aerospace Structural Welder	25.04
23019 - Aircraft Logs and Records Technician	19.47
23021 - Aircraft Mechanic I	23.84
23022 - Aircraft Mechanic II	25.04
23023 - Aircraft Mechanic III	26.30
23040 - Aircraft Mechanic Helper	16.58
23050 - Aircraft Painter	22.39
23060 - Aircraft Servicer	19.47
23070 - Aircraft Survival Flight Equipment Technician	22.39
23080 - Aircraft Worker	21.03
23091 - Aircrew Life Support Equipment (ALSE) Mechanic I	21.03
23092 - Aircrew Life Support Equipment (ALSE) Mechanic II	23.84
23110 - Appliance Mechanic	19.46
23120 - Bicycle Repairer	15.61
23125 - Cable Splicer	19.59
23130 - Carpenter Maintenance	16.07
23140 - Carpet Layer	18.20
23160 - Electrician Maintenance	18.05

23181 - Electronics Technician Maintenance I 18.20
23182 - Electronics Technician Maintenance II 19.46
23183 - Electronics Technician Maintenance III 20.72
23260 - Fabric Worker 16.94
23290 - Fire Alarm System Mechanic 16.77
23310 - Fire Extinguisher Repairer 15.61
23311 - Fuel Distribution System Mechanic 20.72
23312 - Fuel Distribution System Operator 15.61
23370 - General Maintenance Worker 12.01
23380 - Ground Support Equipment Mechanic 23.84
23381 - Ground Support Equipment Servicer 19.47
23382 - Ground Support Equipment Worker 21.03
23391 - Gunsmith I 15.61
23392 - Gunsmith II 18.20
23393 - Gunsmith III 20.72
23410 - Heating Ventilation And Air-Conditioning Mechanic 17.50
23411 - Heating Ventilation And Air Contidioning Mechanic (Research Facility) 18.61
23430 - Heavy Equipment Mechanic 19.27
23440 - Heavy Equipment Operator 17.76
23460 - Instrument Mechanic 20.72
23465 - Laboratory/Shelter Mechanic 19.46
23470 - Laborer 11.37
23510 - Locksmith 19.46
23530 - Machinery Maintenance Mechanic 23.13
23550 - Machinist Maintenance 20.72
23580 - Maintenance Trades Helper 10.67
23591 - Metrology Technician I 20.72
23592 - Metrology Technician II 22.03
23593 - Metrology Technician III 23.33
23640 - Millwright 20.72
23710 - Office Appliance Repairer 19.46
23760 - Painter Maintenance 14.08
23790 - Pipefitter Maintenance 18.39
23810 - Plumber Maintenance 17.27
23820 - Pneudraulic Systems Mechanic 20.72
23850 - Rigger 20.72
23870 - Scale Mechanic 18.20
23890 - Sheet-Metal Worker Maintenance 17.35
23910 - Small Engine Mechanic 18.20
23931 - Telecommunications Mechanic I 19.76
23932 - Telecommunications Mechanic II 21.01
23950 - Telephone Lineman 18.24
23960 - Welder Combination Maintenance 18.31
23965 - Well Driller 21.13
23970 - Woodcraft Worker 20.71
23980 - Woodworker 15.61
24000 - Personal Needs Occupations
24550 - Case Manager 15.01
24570 - Child Care Attendant 10.09
24580 - Child Care Center Clerk 13.25
24610 - Chore Aide 12.78
24620 - Family Readiness And Support Services Coordinator 15.01
24630 - Homemaker 16.12
25000 - Plant And System Operations Occupations
25010 - Boiler Tender 20.72
25040 - Sewage Plant Operator 21.59
25070 - Stationary Engineer 20.72
25190 - Ventilation Equipment Tender 14.29
25210 - Water Treatment Plant Operator 21.59
27000 - Protective Service Occupations
27004 - Alarm Monitor 10.90
27007 - Baggage Inspector 9.48

27008 - Corrections Officer	12.05
27010 - Court Security Officer	12.05
27030 - Detection Dog Handler	10.90
27040 - Detention Officer	12.05
27070 - Firefighter	12.05
27101 - Guard I	9.48
27102 - Guard II	10.90
27131 - Police Officer I	12.05
27132 - Police Officer II	13.40
28000 - Recreation Occupations	
28041 - Carnival Equipment Operator	13.24
28042 - Carnival Equipment Repairer	14.46
28043 - Carnival Worker	9.78
28210 - Gate Attendant/Gate Tender	13.18
28310 - Lifeguard	11.01
28350 - Park Attendant (Aide)	14.74
28510 - Recreation Aide/Health Facility Attendant	11.84
28515 - Recreation Specialist	18.26
28630 - Sports Official	11.74
28690 - Swimming Pool Operator	17.71
29000 - Stevedoring/Longshoremen Occupational Services	
29010 - Blocker And Bracer	25.98
29020 - Hatch Tender	25.98
29030 - Line Handler	25.98
29041 - Stevedore I	24.18
29042 - Stevedore II	27.79
30000 - Technical Occupations	
30010 - Air Traffic Control Specialist Center (HFO) (see 2)	40.29
30011 - Air Traffic Control Specialist Station (HFO) (see 2)	27.78
30012 - Air Traffic Control Specialist Terminal (HFO) (see 2)	30.59
30021 - Archeological Technician I	17.49
30022 - Archeological Technician II	19.56
30023 - Archeological Technician III	24.21
30030 - Cartographic Technician	23.18
30040 - Civil Engineering Technician	23.08
30051 - Cryogenic Technician I	25.57
30052 - Cryogenic Technician II	28.24
30061 - Drafter/CAD Operator I	17.49
30062 - Drafter/CAD Operator II	19.56
30063 - Drafter/CAD Operator III	20.77
30064 - Drafter/CAD Operator IV	25.57
30081 - Engineering Technician I	14.84
30082 - Engineering Technician II	16.66
30083 - Engineering Technician III	18.64
30084 - Engineering Technician IV	23.08
30085 - Engineering Technician V	28.24
30086 - Engineering Technician VI	34.16
30090 - Environmental Technician	23.08
30095 - Evidence Control Specialist	23.08
30210 - Laboratory Technician	20.77
30221 - Latent Fingerprint Technician I	25.57
30222 - Latent Fingerprint Technician II	28.24
30240 - Mathematical Technician	23.34
30361 - Paralegal/Legal Assistant I	19.54
30362 - Paralegal/Legal Assistant II	24.21
30363 - Paralegal/Legal Assistant III	29.61
30364 - Paralegal/Legal Assistant IV	35.83
30375 - Petroleum Supply Specialist	28.24
30390 - Photo-Optics Technician	21.93
30395 - Radiation Control Technician	28.24
30461 - Technical Writer I	23.08
30462 - Technical Writer II	28.24
30463 - Technical Writer III	34.16
30491 - Unexploded Ordnance (UXO) Technician I	25.60
30492 - Unexploded Ordnance (UXO) Technician II	30.98

30493 - Unexploded Ordnance (UXO) Technician III		37.13
30494 - Unexploded (UXO) Safety Escort		25.60
30495 - Unexploded (UXO) Sweep Personnel		25.60
30501 - Weather Forecaster I		25.57
30502 - Weather Forecaster II		31.09
30620 - Weather Observer Combined Upper Air Or Surface Programs	(see 2)	20.77
30621 - Weather Observer Senior	(see 2)	23.08
31000 - Transportation/Mobile Equipment Operation Occupations		
31010 - Airplane Pilot		30.98
31020 - Bus Aide		8.15
31030 - Bus Driver		10.66
31043 - Driver Courier		9.69
31260 - Parking and Lot Attendant		9.91
31290 - Shuttle Bus Driver		11.65
31310 - Taxi Driver		11.41
31361 - Truckdriver Light		10.59
31362 - Truckdriver Medium		11.61
31363 - Truckdriver Heavy		14.64
31364 - Truckdriver Tractor-Trailer		14.64
99000 - Miscellaneous Occupations		
99020 - Cabin Safety Specialist		15.10
99030 - Cashier		9.63
99050 - Desk Clerk		9.70
99095 - Embalmer		25.60
99130 - Flight Follower		25.60
99251 - Laboratory Animal Caretaker I		23.38
99252 - Laboratory Animal Caretaker II		25.54
99260 - Marketing Analyst		21.54
99310 - Mortician		25.60
99410 - Pest Controller		14.61
99510 - Photofinishing Worker		13.45
99710 - Recycling Laborer		17.32
99711 - Recycling Specialist		23.38
99730 - Refuse Collector		16.40
99810 - Sales Clerk		9.87
99820 - School Crossing Guard		17.27
99830 - Survey Party Chief		23.01
99831 - Surveying Aide		13.08
99832 - Surveying Technician		17.00
99840 - Vending Machine Attendant		23.38
99841 - Vending Machine Repairer		29.78
99842 - Vending Machine Repairer Helper		23.38

Note: Executive Order (EO) 13706 Establishing Paid Sick Leave for Federal Contractors applies to all contracts subject to the Service Contract Act for which the contract is awarded (and any solicitation was issued) on or after January 1 2017. If this contract is covered by the EO the contractor must provide employees with 1 hour of paid sick leave for every 30 hours they work up to 56 hours of paid sick leave each year. Employees must be permitted to use paid sick leave for their own illness injury or other health-related needs including preventive care; to assist a family member (or person who is like family to the employee) who is ill injured or has other health-related needs including preventive care; or for reasons resulting from or to assist a family member (or person who is like family to the employee) who is the victim of domestic violence sexual assault or stalking. Additional information on contractor requirements and worker protections

under the EO is available at www.dol.gov/whd/govcontracts.

ALL OCCUPATIONS LISTED ABOVE RECEIVE THE FOLLOWING BENEFITS:

HEALTH & WELFARE: $4.60 per hour up to 40 hours per week or $184.00 per week or $797.33 per month

HEALTH & WELFARE EO 13706: $4.23 per hour up to 40 hours per week or $169.20 per week or $733.20 per month*

*This rate is to be used only when compensating employees for performance on an SCA-covered contract also covered by EO 13706 Establishing Paid Sick Leave for Federal Contractors. A contractor may not receive credit toward its SCA obligations for any paid sick leave provided pursuant to EO 13706.

VACATION: 2 weeks paid vacation after 1 year of service with a contractor or successor; and 4 weeks after 3 years. Length of service includes the whole span of continuous service with the present contractor or successor wherever employed and with the predecessor contractors in the performance of similar work at the same Federal facility. (Reg. 29 CFR 4.173)

HOLIDAYS: A minimum of ten paid holidays per year: New Year's Day Martin Luther King Jr.'s Birthday Washington's Birthday Memorial Day Independence Day Labor Day Columbus Day Veterans' Day Thanksgiving Day and Christmas Day. (A contractor may substitute for any of the named holidays another day off with pay in accordance with a plan communicated to the employees involved.) (See 29 CFR 4.174)

THE OCCUPATIONS WHICH HAVE NUMBERED FOOTNOTES IN PARENTHESES RECEIVE THE FOLLOWING:

1) COMPUTER EMPLOYEES: Under the SCA at section 8(b) this wage determination does not apply to any employee who individually qualifies as a bona fide executive administrative or professional employee as defined in 29 C.F.R. Part 541. Because most Computer System Analysts and Computer Programmers who are compensated at a rate not less than $27.63 (or on a salary or fee basis at a rate not less than $455 per week) an hour would likely qualify as exempt computer professionals (29 C.F.R. 541. 400) wage rates may not be listed on this wage determination for all occupations within those job families. In addition because this wage determination may not list a wage rate for some or all occupations within those job families if the survey data indicates that the prevailing wage rate for the occupation equals or exceeds $27.63 per hour conformances may be necessary for certain nonexempt employees. For example if an individual employee is nonexempt but nevertheless performs duties within the scope of one of the Computer Systems Analyst or Computer Programmer occupations for which this wage determination does not specify an SCA wage rate then the wage rate for that employee must be conformed in accordance with the conformance procedures described in the conformance note included on this wage

determination.

Additionally because job titles vary widely and change quickly in the computer industry job titles are not determinative of the application of the computer professional exemption. Therefore the exemption applies only to computer employees who satisfy the compensation requirements and whose primary duty consists of:

(1) The application of systems analysis techniques and procedures including consulting with users to determine hardware software or system functional specifications;

(2) The design development documentation analysis creation testing or modification of computer systems or programs including prototypes based on and related to user or system design specifications;

(3) The design documentation testing creation or modification of computer programs related to machine operating systems; or

(4) A combination of the aforementioned duties the performance of which requires the same level of skills. (29 C.F.R. 541.400).

2) AIR TRAFFIC CONTROLLERS AND WEATHER OBSERVERS - NIGHT PAY & SUNDAY PAY: If you work at night as part of a regular tour of duty you will earn a night differential and receive an additional 10% of basic pay for any hours worked between 6pm and 6am. If you are a full-time employed (40 hours a week) and Sunday is part of your regularly scheduled workweek you are paid at your rate of basic pay plus a Sunday premium of 25% of your basic rate for each hour of Sunday work which is not overtime (i.e. occasional work on Sunday outside the normal tour of duty is considered overtime work).

** HAZARDOUS PAY DIFFERENTIAL **

An 8 percent differential is applicable to employees employed in a position that represents a high degree of hazard when working with or in close proximity to ordnance explosives and incendiary materials. This includes work such as screening blending dying mixing and pressing of sensitive ordnance explosives and pyrotechnic compositions such as lead azide black powder and photoflash powder. All dry-house activities involving propellants or explosives. Demilitarization modification renovation demolition and maintenance operations on sensitive ordnance explosives and incendiary materials. All operations involving re-grading and cleaning of artillery ranges.

A 4 percent differential is applicable to employees employed in a position that represents a low degree of hazard when working with or in close proximity to ordnance (or employees possibly adjacent to) explosives and incendiary materials which involves potential injury such as laceration of hands face or arms of the employee engaged in the operation irritation of the skin minor burns and the like; minimal damage to immediate or adjacent work area or equipment being used. All operations involving unloading storage and hauling of ordnance explosive and incendiary ordnance material other than small arms ammunition. These differentials are only applicable to work that has been specifically designated by the agency for ordnance explosives and incendiary material differential pay.

** UNIFORM ALLOWANCE **

If employees are required to wear uniforms in the performance of this contract (either by the terms of the Government contract by the employer by the state or local law etc.) the cost of furnishing such uniforms and maintaining (by laundering or dry cleaning) such uniforms is an expense that may not be borne by an employee where such cost reduces the hourly rate below that required by the wage determination. The Department of Labor will accept payment in accordance with the following standards as compliance:

The contractor or subcontractor is required to furnish all employees with an adequate number of uniforms without cost or to reimburse employees for the actual cost of the uniforms. In addition where uniform cleaning and maintenance is made the responsibility of the employee all contractors and subcontractors subject to this wage determination shall (in the absence of a bona fide collective bargaining agreement providing for a different amount or the furnishing of contrary affirmative proof as to the actual cost) reimburse all employees for such cleaning and maintenance at a rate of $3.35 per week (or $.67 cents per day). However in those instances where the uniforms furnished are made of ""wash and wear"" materials may be routinely washed and dried with other personal garments and do not require any special treatment such as dry cleaning daily washing or commercial laundering in order to meet the cleanliness or appearance standards set by the terms of the Government contract by the contractor by law or by the nature of the work there is no requirement that employees be reimbursed for uniform maintenance costs.

** SERVICE CONTRACT ACT DIRECTORY OF OCCUPATIONS **

The duties of employees under job titles listed are those described in the ""Service Contract Act Directory of Occupations"" Fifth Edition (Revision 1) dated September 2015 unless otherwise indicated.

** REQUEST FOR AUTHORIZATION OF ADDITIONAL CLASSIFICATION AND WAGE RATE Standard Form 1444 (SF-1444) **

Conformance Process:

The contracting officer shall require that any class of service employee which is not listed herein and which is to be employed under the contract (i.e. the work to be performed is not performed by any classification listed in the wage determination) be classified by the contractor so as to provide a reasonable relationship (i.e. appropriate level of skill comparison) between such unlisted classifications and the classifications listed in the wage determination (See 29 CFR 4.6(b)(2)(i)). Such conforming procedures shall be initiated by the contractor prior to the performance of contract work by such unlisted class(es) of employees (See 29 CFR 4.6(b)(2)(ii)). The Wage and Hour Division shall make a final determination of conformed classification wage rate and/or fringe benefits which shall be paid to all employees performing in the classification from the first day of work on which contract work is performed by them in the classification. Failure to pay such unlisted employees the compensation agreed upon by the interested

parties and/or fully determined by the Wage and Hour Division retroactive to the date such class of employees commenced contract work shall be a violation of the Act and this contract. (See 29 CFR 4.6(b)(2)(v)). When multiple wage determinations are included in a contract a separate SF-1444 should be prepared for each wage determination to which a class(es) is to be conformed.

The process for preparing a conformance request is as follows:

1) When preparing the bid the contractor identifies the need for a conformed occupation(s) and computes a proposed rate(s).

2) After contract award the contractor prepares a written report listing in order the proposed classification title(s) a Federal grade equivalency (FGE) for each proposed classification(s) job description(s) and rationale for proposed wage rate(s) including information regarding the agreement or disagreement of the authorized representative of the employees involved or where there is no authorized representative the employees themselves. This report should be submitted to the contracting officer no later than 30 days after such unlisted class(es) of employees performs any contract work.

3) The contracting officer reviews the proposed action and promptly submits a report of the action together with the agency's recommendations and pertinent information including the position of the contractor and the employees to the U.S. Department of Labor Wage and Hour Division for review (See 29 CFR 4.6(b)(2)(ii)).

4) Within 30 days of receipt the Wage and Hour Division approves modifies or disapproves the action via transmittal to the agency contracting officer or notifies the contracting officer that additional time will be required to process the request.

5) The contracting officer transmits the Wage and Hour Division's decision to the contractor.

6) Each affected employee shall be furnished by the contractor with a written copy of such determination or it shall be posted as a part of the wage determination (See 29 CFR 4.6(b)(2)(iii)).

Information required by the Regulations must be submitted on SF-1444 or bond paper.

When preparing a conformance request the ""Service Contract Act Directory of Occupations"" should be used to compare job definitions to ensure that duties requested are not performed by a classification already listed in the wage determination. Remember it is not the job title but the required tasks that determine whether a class is included in an established wage determination. Conformances may not be used to artificially split combine or subdivide classifications listed in the wage determination (See 29 CFR 4.152(c)(1))."

EXHIBIT B

UOG BID NO.B21-17

PURCHASING OF HVAC EQUIPMENT OF THE UNIVERSITY OF GUAM

Scope of Work

1. Scope of the Work

   This bid is to select and award a contract for the purchasing of multiple Air Conditioning units for the University of Guam.

2. Bid Submittals

   a) Bid prices shall be submitted on Bid Price Form. All prices shall include shipping, delivery,and manufacturer's warranty. Any additional cost not stated in this bid but are required to complete the delivery and installation must be included in the bidder's price.

   b) Bidder shall submit an electronic copy to the Share folder that UOG procurement officeprovides.

   Contractor is required to submit prices for Table 1.0.
   Bid award to be based on the required items in Table 1.0 and to be based on price, compliance to the specification, services, delivery and any requirements in the BID package, BID NO. B21-17.

Table 1.0 Bid Price Form

No.	ITEM DESCRIPTION					BID Price
1	LOCATION	UNIT	TONS	VOLTAGE	TVX	
	RFK BUILDING SECOND FLOOR	1	50	208 / 230	2 EA. - 25	
	RFK BUILDING FIRST FLOOR	1	40	208 / 230	2 EA. -	
	20RFK BUILDING FIRST FLOOR MAIN ENTRANCE	1	15	208 / 230	2 EA. -	
	7.5RFK BUILDING FIRST FLOOR AV ROOM	1	15	208 / 230	2 EA. -	
	7.5RFK BUILDING FIRST FLOOR OFFICES	1	20	208 / 230	2 EA. - 10	
	PIP (GLE) SECOND FLOOR	1	20	208 / 230	2 EA. -	
	10SCIENCE BUILDING FIRST FLOOR	1	40	208 / 230	2 EA. -	
	20SCIENCE BUILDING SECOND FLOOR	1	40	208 / 230	2 EA. -	
	20SCIENCE BUILDING THIRD FLOOR	1	20	208 / 230	2 EA. -	
	10EGLISH COMMUNICATION BUILDING CLASSROO	1	30	208 / 230	2 EA. -	
	15COMPUTER CENTER OIT					

	BUILDING FIRST FLOOR	1	50	277 / 460	2 EA. - 25	
	LECTURE HALL AUDITORIUM	1	20	277 / 460	2 EA. - 10	
	MARINE LAB FIRST FLOOR	2	10	208 / 230	2 EA. - 5	
	MARINE LAB SECOND FLOOR	2	10	208 / 230	2 EA. – 5	
	HSS BUILDING	2	50	277 / 460	2 EA. – 25	
	HSS BUILDING	1	30	277 / 460	2 EA. – 15	
Grand Total						
Delivery:_____weeks after receipt of purchase order						

_____

SIGNATURE OF BIDDER DATE

OPTIONS

For Table 2.0 Options, the bidder's price will not be included as part of the total price evaluation for this bid award. UOG reserves the right to exercise any or part of the options requested. Insert any additional options recommended.

Table 2.0 Options

No.	Item Description	Price
1	Services for Maintenance and upkeep.	
2	Services for disposal.	
3	Replacement/trade in program	

OTHER NOTES:

1. These specifications have been written to describe minimum equipment and performance requirements to be supplied by the equipment manufacturer bidding. Reasonable tests may be conducted upon delivery before acceptance.

2. The University reserves the right to accept and/or reject any and all bids, to waive any defects, irregularities, or specification discrepancies and to award the bid deemed to be in the best interest of the University.

NOTE: Name and title of author of specifications:

University of Guam

Glenn Leon Guerrero, Director, Facilities Management & Services, Email: glennlg@triton.uog.edu

Emily Gumataotao, Supply Management Administrator, Email: eggumataotao@triton.uog.edu

UNIVERSITY OF GUAM
UNIBETSEDÅT GUÅHAN

ADMINISTRATION & FINANCE
Consolidated Procurement Office

AMENDMENT 3

Invitation for Bid (IFB)
UOG IFB No. B21-17

Date Issued: November 19, 2021

"PURCHASING HVAC EQUIPMENT"

This is to notify all prospective offerors of the following amendment set forth below:

1.1 **Question & Answer Sheet 1 as set forth in the attached.**
1.2 **REPLACE Exhibit B** "Scope of Work & Bid Price Form" with corrected forms as set forth in the attached.
1.3 **Copy of Pre-bid Conference Sign-In sheet as set forth in the attached.**
1.4 **Deadline for submission should read as follows: Monday, November 29, 2021 at 2:00 p.m. (your bid submission must be submitted electronically to the Bid Share folder provided by UOG Procurement Office on or before 2:00 p.m.) Bid opening will take place at 3:15 p.m. via ZOOM link provided by procurement office to all registered offerors.**

All other terms and conditions remain the same.

Emily G. Gumataotao
Supply Management Administrator

Please acknowledge receipt and email: **uog.bids@triton.uog.edu:**

Name of company: _____

_____
Print Name/Signature/date

T: +1 671.735.2925 F: +1 671.735-3010 W: www.uog.edu E: uog.bids@triton.uog.edu
Mailing Address: 303 University Drive UOG Station Mangilao, Guam 96913

UOG INVITATION FOR BIDS NO. B21-17:
PURCHASING OF HVAC EQUIPMENT

QUESTION & ANSWER SHEET NO. 1
November 19, 2021

In response to the written "Questions" and/or 'Request for Clarifications' UOG received as of 10/26/2021 @ 4:49pm from vendor: **Guam Pacific Enterprise, Inc.**

Question 1: Section 5011 of Chapter 5 is not included in the Bid documents. (Policy In Favor of Serviced - Disabled Veteran Owned Business)

Answer: **Please refer to Amendment 2. Item 1.4 #21**

Question 2: Is the Bid All or None Bid?

Answer: **UOG confirms yes, this is an All or None Bid.**

Question 3: Is the installation required?

Answer: **UOG confirms Installation is not required.**

Question 4: Also, will you be using Federal Financial assistance Awards for this Bid therefore it is covered by Buy American Act.

Answer: **UOG confirms Funds are from Higher Education Emergency Relief Fund (HEERF) The Buy American Act is to be followed "to the most extent possible.**

In response to the written "Questions" and/or 'Request for Clarifications' UOG received as of 10/29/2021 @ 5:48pm from vendor: **MJM International Corporation**

Question 1: May I please get more information for the attached? Kindly clarify if it is the ton per unit and column (ton) is the total tonnage.

Answer: **UOG confirms ton is the total tonnage.**

In response to the written "Questions" and/or 'Request for Clarifications' UOG received as of 11/7/2021 @ 12:00pm from vendor: **JWS Refrigeration & A/C Ltd.**

Question 1: It was mentioned that you want to use only one manufacturer for the complete project, but you have Daikin condensers at the Marine Lab. It also is our understanding that many of the indoor units connected to these Daikin condensers also do not operate. These are VRF systems, which means they communicate with each other so you cannot use different manufacturers. Please clarify your intensions on this system.

Answer: **UOG Confirms there is no need for VRF/VRV units as Item Description/Location has been revised to remove Marine Lab requirement. Please refer to Amendment 3, item 1.2.**

Question 2: On the Science building 3rd floor you have two 10-ton condensers which you want to remove and replace with a single 20 ton, do those two-line sets go to one AHU with two circuits?

Answer: **UOG Confirms, Yes, they both connect to one (1) AHU. However, we are only requesting for condensing units not installation.**

Question 3: On the Lecture hall Auditorium you have the exact same issue you have two 10 ton condensers and you want to replace with a single 20 ton, do those two line sets go to one AHU with two circuits?

Answer: **UOG Confirms, Yes, they both connect to one (1) AHU. However, we are only requesting for condensing units not installation.**

Question 4: In the specs Page 28 2.2.1.1 it says "copper to copper condensing coils" and then it says "condensing coils to have a special coating for corrosion coating". Please clarify you want copper fins and a coating on the copper?

Answer: **UOG confirms, copper fins and a coating on the copper is needed.**

Question 5: In the specs Page 28 2.2.1.3 it says you want a "208 volt control circuit". Will 115 volts be acceptable?

Answer: **UOG confirms 115 volts are not acceptable**

Question 6: In Exhibit B page 63 Table 2.0 options No. 1 refers to "Service for maintenance and upkeep". Can you please clarify the meaning of that?

Answer: **UOG confirms although we are only soliciting for condenser units, we would like to understand what the maintenance and upkeep cost for your units. This will give us an idea of the overall cost of your unit.**

Question 7: In Exhibit B page 63 Table 2.0 options No. 3 refers to "Replacement/trade in program". Can you please clarify the meaning of that?

Answer: **UOG confirms although we are only soliciting for condenser units, we would like to understand what the maintenance and upkeep cost for your units. This will give us an idea of the overall cost of your unit.**

Question 8: Does this contract include installation of purchased equipment? At the site visit, it was stated that the contract did not include installation. However, in the bid packet Exhibit B: 2a. it says: "Any additional cost not stated in this bid but are required to complete the delivery and installation must be included in the bidders price" Please clarify.

Answer: **UOG confirms Installation is not required.**

In response to the written "Questions" and/or 'Request for Clarifications' UOG received as of 11/8/2021 @ 11:53am from vendor: **Green Energy Solutions, Inc.**

Question 1: Is the purchase funded by Federal Cares Act funds? If so, do the units need to be BAA compliant?

Answer: **UOG confirms Funds are from Higher Education Emergency Relief Fund (HEERF) The Buy American Act is to be followed "to the most extent possible.**

Question 2: The RFQ Equipment specifications refer to VFR /VRV Units. It does not go into detail on the units being requested.

Answer: **UOG Confirms there is no need for VRF/VRV units as Item Description/Location has been revised to remove Marine Lab requirement. Please refer to Amendment 3, item 1.2.**

Question 3: Of the units requested, the RFQ does not state whether they are Packaged Units, or Ducted Split Units that require Air Handling Units.

Answer: **UOG confirms we are purchasing "Ducted Split Condensers only. No AHU's in this bid.**

Question 4: The RFQ does not state efficiency requirements (EER rating)
Answer: **UOG confirms there are no EER rating.**

Question 5: Are you asking for direct replacements for the units in each of the buildings?

Answer: **UOG confirms, no. In some of the buildings we are consolidating units from smaller units to a bigger unit.**

Question 6: The RFQ mentions Storage, some about installation, & providing specs 5 weeks in advance of purchases. However, the Scope states it purchase only.

Answer: **UOG confirms no storage or installation required.**

Question 7: Does the bidder need to supply storage?

Answer: **UOG confirms no storage required**

In response to the written "Questions" and/or 'Request for Clarifications' UOG received as of 11/9/2021 @ 3:14pm from vendor: **Ability Solutions LLC**

Question 1: Can you provide a copy of the transcript for the sign-in on inspection day?

Answer: **Please refer to Amendment 3, item 1.3.**

In response to the written "Questions" and/or 'Request for Clarifications' UOG received as of 11/10/2021 @ 10:02am from vendor: **Ability Solutions LLC**

Question 1: May I inquire when the deadline is to deliver the equipment's?

Answer: **UOG confirms vendor to provide delivery deadline.**

EXHIBIT B

UOG BID NO.B21-17

PURCHASING OF HVAC EQUIPMENT OF THE UNIVERSITY OF GUAM

Scope of Work

1. Scope of the Work
   This bid is to select and award a contract for the purchasing of multiple Air Conditioning units for the University of Guam.

2. Bid Submittals

   a) Bid prices shall be submitted on Bid Price Form. All prices shall include shipping, delivery,and manufacturer's warranty. Any additional cost not stated in this bid but are required to complete the delivery must be included in the bidder's price.

   b) Bidder shall submit an electronic copy to the Share folder that UOG procurement office provides.
   Contractor is required to submit prices for Table 1.0.
   Bid award to be based on the required items in Table 1.0 and to be based on price, compliance to the specification, services, delivery and any requirements in the BID package, BID NO. B21-17.

Table 1.0 Bid Price Form

No.	ITEM DESCRIPTION					BID Price
1	LOCATION	UNIT	TONS	VOLTAGE	TVX	
	RFK BUILDING SECOND FLOOR	1	50	208 / 230	2 EA. - 25	
	RFK BUILDING FIRST FLOOR	1	40	208 / 230	2 EA. -	
	20RFK BUILDING FIRST FLOOR MAIN ENTRANCE	1	15	208 / 230	2 EA. -	
	7.5RFK BUILDING FIRST FLOOR AV ROOM	1	15	208 / 230	2 EA. -	
	7.5RFK BUILDING FIRST FLOOR OFFICES	1	20	208 / 230	2 EA. - 10	
	PIP (GLE) SECOND FLOOR	1	20	208 / 230	2 EA. -	
	10SCIENCE BUILDING FIRST FLOOR	1	40	208 / 230	2 EA. -	
	20SCIENCE BUILDING SECOND FLOOR	1	40	208 / 230	2 EA. -	
	20SCIENCE BUILDING THIRD FLOOR	1	20	208 / 230	2 EA. -	
	10EGLISH COMMUNICATION BUILDING CLASSROO	1	30	208 / 230	2 EA. -	
	15COMPUTER CENTER OIT					

	BUILDING FIRST FLOOR	1	50	277 / 460	2 EA. - 25	
	LECTURE HALL AUDITORIUM	1	20	277 / 460	2 EA. - 10	
	HSS BUILDING	2	50	277 / 460	2 EA. – 25	
	HSS BUILDING	1	30	277 / 460	2 EA. – 15	
Grand Total						
Delivery:_____weeks after receipt of purchase order						

_____

SIGNATURE OF BIDDER DATE

OPTIONS

For Table 2.0 Options, the bidder's price will not be included as part of the total price evaluation for this bid award. UOG reserves the right to exercise any or part of the options requested. Insert any additional options recommended.

Table 2.0 Options

No.	Item Description	Price
1	Services for Maintenance and upkeep.	
2	Services for disposal.	
3	Replacement/trade in program	

OTHER NOTES:

1. These specifications have been written to describe minimum equipment and performance requirements to be supplied by the equipment manufacturer bidding. Reasonable tests may be conducted upon delivery before acceptance.

2. The University reserves the right to accept and/or reject any and all bids, to waive any defects, irregularities, or specification discrepancies and to award the bid deemed to be in the best interest of the University.

NOTE: Name and title of author of specifications:

University of Guam

Glenn Leon Guerrero, Director, Facilities Management & Services, Email: glennlg@triton.uog.edu

Emily Gumataotao, Supply Management Administrator, Email: eggumataotao@triton.uog.edu

UNIVERSITY OF GUAM
UNIBETSEDÅT GUÅHAN

ATTENDENCE SHEET PRE-BID CONF. 11/03/21 10am

SHEET 1 of

REQUEST FOR PROPOSAL (RFP) REGISTER

ADMINISTRATION & FINANCE
Consolidated Procurement Office

OPA-PA-22-002-381

UOG RFP P21-17 "HVAC PURCHASES"

DATE ISSUED:
ISSUED:
CONFERENCE:

PAID	#	COMPANY NAME	FULL NAME (PERSON REQUESTING / PICKING UP)	EMAIL ADDRESS (PRINT NEATLY)	ADDRESS	DATE	TIME	PHONE NUMBER & FAX NUMBER	RFP SUBMISSION SUBMISSION DATE: TIME: DATE	TIME	REC BY
	1	Guam Pacific Ent.	Geoffrey M Limtenco	guampacific@gmail.com	Harmon	11/3/21	10:00	649-6959728 649-6959 FAX			
	2	J&B Modern Tech	Gene Bangayan	~~Harmon, Gu~~ genebangayan@jbmoderntech.com	Harmon	"	"	483 8855			
	3	MJM	CAROLINE DEVOK DELOS	caroline@mjmetc.com	Harmon	11/3/21	"	646-4394			
	4	J&B Modern tech	Deo Lagman	Dlagman@jbmodern tech.com	Harmon	11/3/21	10AM	864-1811			
	5	J&K Modern Recall	PETER AUBERT VI SR		Harmon	11-3-21	10 AM	482-3925			
	6	JRN B/C & Ref. INC	TERRY GUERRERO	info@jrngu.com	1773 Marine Drive 16 Tam.	11/3/21	10:AM	649-8120/21 649-5737			
	7	JWS Ref+AC	Anthony Richard Scragg	anthonys@jwsguam.com	290 Jun Josa Salas st Tamuning GU 96913	11/3/21	10am	864-7554			
	8	JWS	Roger Jones	rogerj@jwsguam.com	290 SALAS TAMUN	"	"	787-1046			
	9	Dessonis	Chuck Sanchez	chuck.dessonis@gmail.com	Harmon	11/3/21	10a	787-1135			
	10	Amorient	JONATHAN JAVELLANA	j@amorient.com	643 CHALAN SAN ANTONIO STE 106 TAMUNING, GU	11/3	10AM	788-5662			
	11	JWS	Andrew James	ajames@jwsguam.com	290 SALAS Tamuning	11/3	10 am	687-0577			
	12	Port Enterprise	JOHN T RYAN	jtryan@me.com	162 CHALAN SUETA TAMUNING 96913	11/3	10 AM	482-8291			

UNIVERSITY OF GUAM
UNIBETSEDÅT GUÅHAN

REQUEST FOR PROPOSAL (RFP) REGISTER

ADMINISTRATION & FINANCE
Consolidated Procurement Office

OPA-PA-22-002-38

UOG RFP P21-17 "HVAC PURCHASES"

DATE ISSUED:
ISSUED:
CONFERENCE:

PAID	#	COMPANY NAME	FULL NAME (PERSON REQUESTING / PICKING UP)	EMAIL ADDRESS (PRINT NEATLY)	ADDRESS	DATE	TIME	PHONE NUMBER & FAX NUMBER	RFP SUBMISSION SUBMISSION DATE: TIME: DATE	TIME	REC BY
	1	PORT ENT	Nigel Tanglon	doikin@guam.net	Yigo Guam	11-3-21	10:10	971-0188 646-1722			
	2	Ability Solutions	Nacia Atalig	nacia@abilitysolutionsllc.biz	Dededo, Guam	11/3/21	10:15	483-3639 989-3630			
	3	J&P MED. TECH	BERNARD PEREZ	bfperez[illegible]gmail	DEDEDO, GU	11/3/21	10:15	482 4032			
	4										
	5										
	6										
	7										
	8										
	9										
	10										
	11										
	12										

UNIVERSITY OF GUAM
UNIBETSEDÅT GUÅHAN

ADMINISTRATION & FINANCE
Consolidated Procurement Office

AMENDMENT 4

Invitation for Bid (IFB)
UOG IFB No. B21-17

Date Issued: November 22, 2021

"PURCHASING HVAC EQUIPMENT"

This is to notify all prospective offerors of the following amendment set forth below:

1.1 Question & Answer Sheet 2 as set forth in the attached.

All other terms and conditions remain the same.

Emily G. Gumataotao
Supply Management Administrator

Please acknowledge receipt and email: **uog.bids@triton.uog.edu:**

Name of company: _____

_____
Print Name/Signature/date

T: +1 671.735.2925 F: +1 671.735-3010 W: www.uog.edu E: uog.bids@triton.uog.edu
Mailing Address: 303 University Drive UOG Station Mangilao, Guam 96913

QUESTION & ANSWER SHEET NO. 2
November 22, 2021

In response to the written "Questions" and/or 'Request for Clarifications' UOG received as of 11/08/2021 @ 11:12am from vendor: **Guam Pacific Enterprise, Inc.**

Question 1: 1) The quote request is not clear what exactly is required because in Section 2.1.4, 2.2, 2.2.1 , 2.2.1.1specified large split system. Large split system implies 1 condensing unit connected to one indoor air handler.

Then there is another specs on VRF SYSTEMS which are 1 set of outdoor condensing units connected to multiple indoor units. VRF is completely different animal to above large split systems. Please see 2.1 ,2.1.1, 2.1.1.1,2.1.1.2

The lists of equipment could be condensing units for large split systems or VRF systems. Condensing units for large split systems can work with any air handler with DX coils. VRF condensing units could only work with indoor unit by the same manufacturer.

Question- Can you please clarify what is the design intention?

Answer: **UOG confirms this bid request is for a large split system condensing unit only.**

Question 2: Does UOG want VRF or large split systems ?

Answer: **UOG Confirms there is no need for VRF/VRV units as Item Description/Location has been revised to remove Marine Lab requirement. Please refer to Amendment 3, item 1.2.**

Question 3: Does UOG only wants outdoor condensing unit ?

Answer: **UOG confirms this bid request is for a large split system condensing unit only.**

Question 4: Is there any set of mechanical plans? Reason is for vendors to know the design intents, where each piece of equipment goes, what type of indoor units are needed. , control design , etc. These are not off the shelf type products so it is very risky for the purchaser to buy equipment like this.

Answer: **UOG confirms no mechanical plans needed as required information is provided. Please refer to Exhibit A. Please refer to Exhibit B issued in Amendment 3, item 1.2.**

UNIVERSITY OF GUAM
UNIBETSEDÅT GUÅHAN

ADMINISTRATION & FINANCE
Consolidated Procurement Office

AMENDMENT 5

Invitation for Bid (IFB)
UOG IFB No. B21-17

Date Issued: November 24, 2021

"PURCHASING HVAC EQUIPMENT"

This is to notify all prospective offerors of the following amendment set forth below:

1.1 Deadline for submission should read as follows: Monday, December 06, 2021 at 2:00 p.m. (your bid submission must be submitted electronically to the Bid Share folder provided by UOG Procurement Office on or before 2:00 p.m.) Bid opening will take place at 3:15 p.m. via ZOOM link provided by procurement office to all registered offerors.

All other terms and conditions remain the same.

Emily G. Gumataotao
Supply Management Administrator

Please acknowledge receipt and email: **uog.bids@triton.uog.edu:**

Name of company: _____

_____
Print Name/Signature/date

T: +1 671.735.2925 F: +1 671.735-3010 W: www.uog.edu E: uog.bids@triton.uog.edu
Mailing Address: 303 University Drive UOG Station Mangilao, Guam 96913

UNIVERSITY OF GUAM
UNIBETSEDÅT GUÅHAN

ADMINISTRATION & FINANCE
Consolidated Procurement Office

AMENDMENT 6

Invitation for Bid (IFB)
UOG IFB No. B21-17

Date Issued: December 3, 2021

"PURCHASING HVAC EQUIPMENT"

This is to notify all prospective offerors of the following amendment set forth below:

1.1 Question & Answer Sheet 3 as set forth in the attached.

All other terms and conditions remain the same.

Emily G. Gumataotao
Supply Management Administrator

Please acknowledge receipt and email: **uog.bids@triton.uog.edu:**

Name of company: _____

_____
Print Name/Signature/date

T: +1 671.735.2925 F: +1 671.735-3010 W: www.uog.edu E: uog.bids@triton.uog.edu
Mailing Address: 303 University Drive UOG Station Mangilao, Guam 96913

QUESTION & ANSWER SHEET NO. 3
December 3, 2021

In response to the written "Questions" and/or 'Request for Clarifications' UOG received as of 11/05/2021 @ 2:28pm from vendor: **Guam Pacific Enterprise, Inc.**

Question 1: Did UOG remiss by requiring 15% Bid bond under Guam Law for a project that the funds being used is from financial assistance awards ? (American Rescue Funds Act)

Argument. 15 % bid bond pursuant to Guam law only applies for local funds. 15% BID BOND substantially burdens the small business owners and the manufacturers that they are representing

Therefore , it is non compliant and inconsistent with the Section1 and 3 of Executive Order 14005 of President Biden's American Made Act Law. The bid bond should be waived.

Answer: **UOG confirms Bid security shall be required for all competitive sealed bidding for the procurement of supplies or services when the total price is estimated to exceed Twenty-Five Thousand Dollars ($25,000.00). 5 G.C.A. §5212(a). Further, Bid security shall be in an amount equal to fifteen percent (15%) of the total amount bid. 5 G.C.A. §5212(b). There is no exception in the aforementioned Guam Procurement Law for solicitations made by Public Corporations, such as UOG, that are federally funded. When Invitation for Bids requires bid security, noncompliance requires that the bid be rejected. 5 G.C.A. §5212(e).**

TAB 5

UNIVERSITY OF GUAM
UNIBETSEDÅT GUÅHAN

ADMINISTRATION & FINANCE
Consolidated Procurement Office

ABSTRACT ANALYSIS
UOG IFB BID NO. B21-17
Title: PURCHASING OF HVAC EQUIPMENT
Date Issued: 10/22/2021 Date/Time Opened: 12/06/2021/ 3:15 p.m.
Amendments Issued: Amendment 1 10/29/2021, **Amendment 2** 10/29/2021, **Amendment 3** 11/19/2021, **Amendment 4** 11/22/2021, **Amendment 5** 11/24/2021, & **Amendment 6** 12/03/2021
This Bid is requested for: Lowest Responsive and Responsible Bidder

	VENDORS/BIDDERS		
	ALL BUSINESS ENTERPRISE	JWS	TONY'S WORKSHOP
Date Bid Submitted	12/06/2021	12/06/2021	12/06/2021
Time Bid Submitted	11:31	11:33	1:21 PM
Business License	X	NOT INCLUDED	NOT INCLUDED
Contact for Contract Administration (B)	X	X	X
Bidder's Qualifications (C)	X	X	X
BID SECURITY (D)	CC – $218,410.00	CC – $98,785.80	BB
Major Shareholder Affidavit (E)	X	X	X
Non-Collusion Affidavit (F)	X	X	X
Gratuities, Kickbacks Favors (G)	X	X	X
Ethical Standards (H)	X	X	X
DOL Wage Determination (I)	X	X	X
Contingent Fees (J)	X	X	X
Amendment 1	X	X	X
Amendment 2	X	X	X
Amendment 3	X	X	X
Amendment 4	X	X	X
Amendment 5	X	X	X
Amendment 6	X	X	X

Table 1.0

RFK BUILDING SECOND FLOOR	$120,002.50	$74,837.72	$55,372.32
RFK BUILDING FIRST FLOOR	$107,574.60	$59,870.18	$52,856.01
RFK BUILDING FIRST FLOOR MAIN ENTRANCE	$67,372.50	$22,451.32	$17,711.51
RFK BUILDING FIRST FLOOR AV ROOM	$67,372.50	$22,451.32	$17,711.51
RFK BUILDING FIRST FLOOR OFFICES	$80,461.60	$29,935.09	$24,262.45
PIP SECOND FLOOR	$80,461.60	$29,935.09	$24,262.45
SCIENCE BUILDING FIRST FLOOR	$107,574.60	$59,870.18	$52,856.01
SCIENCE BUILDING SECOND FLOOR	$107,574.60	$59,870.18	$52,856.01
SCIENCE BUILDING THIRD FLOOR	$80,461.60	$29,935.09	$24,262.45
ENGLISH COMMUNICATION BUILDING CLASSROOM	$983,59.60	$44,902.64	$36,503.19
COMPUTER CENTER OIT BUILIDING FIRST FLOR	$120,002.50	$74,837.73	$55,372.32
LECTURE HALL AUDITORIUM	$80,461.60	$29,935.09	$24,262.45
HSS BUILDING	$240,005.00	$74,837.73	$110,134.64
HSS BUILDING	$98,359.60	$44,902.64	$36,503.19
GRAND TOTAL	**$1,456,044.40**	**$658,572.00**	**$584,926.51**

T: +1 671.735.2925 F: +1 671.735.3010 W: www.uog.edu E: uog.bids@triton.uog.edu
Mailing Address: 303 University Drive UOG Station Mangilao, Guam 96913

DELIVERY	18-20 WEEKS	9-12 WEEKS	24 WEEKS

TABLE 2.0

Service for Maintenance and upkeep	$51,000.00	$1,275.00 QUARTER $5,100.00 ANNUAL	$26,000.00 QUARTER
Services for disposal	$11,250.00	INCLUSIVE	$54,148.63
Replacement/trade in program	TO BE DISCUSSED UPON AWARD.	1 YEAR WARRANTY	$196,766.42

Attendees: (Print name & sign opposite the firm you represent)

Company/Firm Name	Representative (Print Name)	Signature
All Business Enterprises Corporation	Nelia Bangayan	ONLINE ZOOM
Tony's Workshop	Michael Ecalnea	ONLINE ZOOM
All Business Enterprises Corporation	Gene Bangayan	ONLINE ZOOM
JWS	Anthony Scragg	ONLINE ZOOM

Tabulators:

Emily G. Gumataotao	SMA	ONLINE ZOOM
Kaimana K. Terlaje	Property Control Officer	ONLINE ZOOM

UNIVERSITY OF GUAM
UNIBETSEDÅT GUÅHAN

ADMINISTRATION & FINANCE
Consolidated Procurement Office

December 7, 2021

TO: for: Dr. Thomas W. Krise, President ☑ APPROVED / ☐ DISAPPROVED

VIA: Mr. Randall V. Wiegand, Vice President Administration and Finance
Ms. Abigail Martin, Interim Comptroller

FROM: Ms. Emily G. Gumataotao, Supply Management Administrator

RE: **UOG BID No. B21-17, "PURCHASING OF HVAC EQUIPMENT"**

UOG BID No. B21-17 was issued October 22, 2021. There were seventeen (17) prospective bidders that picked up a bid package. Amendment 1 & 2, issued on 10/29/21, Amendment 3 issued on 11/19/21, Amendment 4 issued on 11/22/21, Amendment 5 issued on 11/24/21, and Amendment 6 issued on 12/03/21. Bid opening was held virtually via ZOOM Conference on 12/06/21 at 315pm. Three (3) bidders submitted their proposal on time.
See Bid details below:

Company	Item Bid offer	QTY	Description
ALL BUSINESS ENTERPRISE	**$1,456,044.40**		
LOCATION UNIT TONS VOLTAGE TVX			
RFK BUILDING SECOND FLOOR 1 50 208 / 230 2 EA. - 25	$120,002.50		
RFK BUILDING FIRST FLOOR 1 40 208 / 230 2 EA. -	$107,574.60		
RFK BUILDING FIRST FLOOR MAIN ENTRANCE 1 15 208 / 230 2 EA. -	$67,372.50		
RFK BUILDING FIRST FLOOR AV ROOM 1 15 208 / 230 2 EA. -	$67,372.50		
RFK BUILDING FIRST FLOOR OFFICES 1 20 208 / 230 2 EA. - 10	$80,461.60		
PIP SECOND FLOOR 1 20 208 / 230 2 EA. -	$80,461.60		
SCIENCE BUILDING FIRST FLOOR 1 40 208 / 230 2 EA. -	$107,574.60		
SCIENCE BUILDING SECOND FLOOR 1 40 208 / 230 2 EA. -	$107,574.60		
SCIENCE BUILDING THIRD FLOOR 1 20 208 / 230 2 EA. -	$80,461.60		
ENGLISH COMMUNICATION BUILDING CLASSROOM 1 30 208 / 230 2 EA.	$983,59.60		
COMPUTER CENTER OIT BUILIDING FIRST FLOOR 1 50 208 / 230 2 EA. - 25	$120,002.50		
LECTURE HALL AUDITORIUM 1 20 277 / 460 2 EA. - 10	$80,461.60		
HSS BUILDING 2 50 277 / 460 2 EA. – 25	$240,005.00		
HSS BUILDING 1 30 277 / 460 2 EA. – 15	$98,359.60		
GRAND TOTAL	**$1,456,044.40**		

T: +1 671.735.2925 F: +1 671.735.3010 W: www.uog.edu E: uog.bids@triton.uog.edu
Mailing Address: 303 University Drive UOG Station Mangilao, Guam 96913

JWS **$658,572.00**

LOCATION UNIT TONS VOLTAGE TVX	
RFK BUILDING SECOND FLOOR 1 50 208 / 230 2 EA. - 25	$74,837.72
RFK BUILDING FIRST FLOOR 1 40 208 / 230 2 EA. -	$59,870.18
RFK BUILDING FIRST FLOOR MAIN ENTRANCE 1 15 208 / 230 2 EA. -	$22,451.32
RFK BUILDING FIRST FLOOR AV ROOM 1 15 208 / 230 2 EA. -	$22,451.32
RFK BUILDING FIRST FLOOR OFFICES 1 20 208 / 230 2 EA. - 10	$29,935.09
PIP SECOND FLOOR 1 20 208 / 230 2 EA. -	$29,935.09
SCIENCE BUILDING FIRST FLOOR 1 40 208 / 230 2 EA. -	$59,870.18
SCIENCE BUILDING SECOND FLOOR 1 40 208 / 230 2 EA. -	$59,870.18
SCIENCE BUILDING THIRD FLOOR 1 20 208 / 230 2 EA. -	$29,935.09
ENGLISH COMMUNICATION BUILDING CLASSROOM 1 30 208 / 230 2 EA.	$44,902.64
COMPUTER CENTER OIT BUILIDING FIRST FLOOR 1 50 208 / 230 2 EA. - 25	$74,837.73
LECTURE HALL AUDITORIUM 1 20 277 / 460 2 EA. - 10	$29,935.09
HSS BUILDING 2 50 277 / 460 2 EA. – 25	$74,837.73
HSS BUILDING 1 30 277 / 460 2 EA. – 15	$44,902.64
GRAND TOTAL	**$658,572.00**

TONY's WORKSHOP **$584,926.51**

LOCATION UNIT TONS VOLTAGE TVX	
RFK BUILDING SECOND FLOOR 1 50 208 / 230 2 EA. - 25	$55,372.32
RFK BUILDING FIRST FLOOR 1 40 208 / 230 2 EA. -	$52,856.01
RFK BUILDING FIRST FLOOR MAIN ENTRANCE 1 15 208 / 230 2 EA. -	$17,711.51
RFK BUILDING FIRST FLOOR AV ROOM 1 15 208 / 230 2 EA. -	$17,711.51
RFK BUILDING FIRST FLOOR OFFICES 1 20 208 / 230 2 EA. - 10	$24,262.45
PIP SECOND FLOOR 1 20 208 / 230 2 EA. -	$24,262.45
SCIENCE BUILDING FIRST FLOOR 1 40 208 / 230 2 EA. -	$52,856.01
SCIENCE BUILDING SECOND FLOOR 1 40 208 / 230 2 EA. -	$52,856.01
SCIENCE BUILDING THIRD FLOOR 1 20 208 / 230 2 EA. -	$24,262.45
ENGLISH COMMUNICATION BUILDING CLASSROOM 1 30 208 / 230 2 EA.	$36,503.19

COMPUTER CENTER OIT BUILIDING FIRST FLOOR 1 50 208 / 230 2 EA. - 25	$55,372.32
LECTURE HALL AUDITORIUM 1 20 277 / 460 2 EA. - 10	$24,262.45
HSS BUILDING 2 50 277 / 460 2 EA. – 25	$110,134.64
HSS BUILDING 1 30 277 / 460 2 EA. – 15	$36,503.19
GRAND TOTAL	**$584,926.51**

The Procurement Office has reviewed and analyzed the three (3) bid submissions and recommends **TONY's WORKSHOP** for the award. TONY's WORKSHOP bid submission is found to be responsible and responsive. It is in compliance with the bid specifications and UOG Procurement Regulations Article 3.9.3.

UOG Attendees

Emily G. Gumataotao – SUPPLY MGT ADMINISTRATOR
Kaimana Terlaje – PROPERTY CONTROL OFFICER

Vendors:

1. Nelia Bangayan	All Business Enterprises Corporation	ONLINE ZOOM
2. Michael Ecalnea	Tony's Workshop	ONLINE ZOOM
3. Gene Bangayan	All Business Enterprises Corporation	ONLINE ZOOM
4. Anthony Scragg	JWS	ONLINE ZOOM

Award is subject to availability of funds.

Attachment: Bid abstract analysis
cc: Procurement Files / FMS

TAB 6

UNIVERSITY OF GUAM
UNIBETSEDÅT GUÅHAN

OFFICE OF THE PRESIDENT

January 25, 2022

Nelia F. Bangayan, President
All Business Enterprises, Corp.
P.O. Box 8410
Tamuning, Guam, 96931

RE: Protest Decision for December 17, 2021 Protest regarding UOG-IFB-B21-17 (Purchasing of HVAC Equipment)

Dear Ms. Bangayan:

In accordance with Section 9.2.1, University of Guam's Procurement Regulations (UOGPR), I have reviewed your Protest dated December 17, 2021 regarding UOG-IFB-B21-17 (Purchasing of HVAC Equipment) (IFB) in which you raised the following issues concerning UOG's award of the IFB contract to Tony's Workshop: (1) The bid from Tony's Workshop, who was the lowest bidder, was not responsive because they did not include the Factory Phenolic Coating for six (6) of the units described in the brochure they submitted with their bid; and (2) The bid from JWS, the second lowest bidder, was non-responsive because it had no indication of Factory Phenolic Coating and because the units being offered by JWS were to be manufactured by DB-Dunham-Bush Industries SDN BHD, a Malaysian Company. The following constitutes UOG's decision for each of these issues.

1. There is no merit to All Business Enterprises, Corp.'s (ABEC) allegation that the bid from Tony's Workshop was non-responsive. The IFB's specifications required that the successful bidder provide condenser coils that are copper finned and **coat the condenser and evaporator coils with a uniformly applied epoxy electrodeposition, phenolic, or vinyl type coating** to all coil surface areas without material bridging between fins (Bold Emphasis Added). Section 2.2.1.1 Air-To-Refrigerant Coil, IFB Specifications. Hence, so long as the condenser coils on the HVAC equipment provided by the successful bidder are coated with either a epoxy electrodeposition, phenolic, or a vinyl type coating, the units have met this specification. Further, ABEC merely assumes that Tony's Workshop's bid is non-responsive because the description of the coating for six of the units in the brochure that accompanied Tony's Workshop's bid did not describe which of these coatings would be provided. However, the specifications state that the successful bidder must provide UOG with the Manufacturer's standard catalog data, at least five (5) weeks prior to the purchase or installation of a particular component, highlights to show material, size, options, performance charts and curves, etc., in adequate detail to demonstrate compliance with contract requirements. Section 2.1 Materials, IFB Specifications. Hence, for the six (6) units identified by ABEC as not having descriptions

of which of the three condenser coil coatings authorized by the specifications the units will have, the specifications require Tony's Workshop to provide the manufacturers standard catalog data at least five (5) weeks prior to the purchase or installation of the six (6) units at issue showing compliance with the condenser coating requirement. Currently, the aforementioned five (5) week time period for Tony's Workshop to provide this information has not begun because UOG has not purchased or installed any of the six (6) units identified in ABEC's protest. Based on the foregoing, ABEC's allegations that Tony's Workshop's bid submitted in response to the IFB was non-responsive have no merit.

2. As UOG has found that ABEC's allegation that Tony's Workshop's bid was non-response have no merit, the remaining issues of whether JWS's bid, the second lowest bidder, was non-responsive because it had no indication of Factory Phenolic Coating and because the units being offered by JWS were to be manufactured by DB-Dunham-Bush Industries SDN BHD, a Malaysian Company, are now moot. Alternatively, to the extent that the issue of whether JWS' bid was non-responsive because it had no indication of Factory Phenolic Coating, UOG hereby incorporates, by reference herein, UOG's response and analysis concerning ABEC's allegations regarding Factory Phenolic Coating and Tony's Workshop's bid set forth above, and hereby finds no merit to this allegation.

Accordingly, ABEC's December 17, 2021 Protest concerning the IFB is hereby DENIED. In accordance with Section 9.2.7.2, UOGPR, ABEC is hereby informed of its right to administrative and judicial review of this Protest Decision.

DATED this 25th day of January, 2022 by:

THOMAS W. KRISE, Ph.D.
President

Protest Decision for December 17, 2021 Protest Regarding UOG-IFB-B21-17 (Purchasing of HVAC Equipment)

Cynthia Guerrero <cguerrero@triton.uog.edu>
Tue 2/1/2022 5:03 PM

To: nbangayan@jbmoderntech.com <nbangayan@jbmoderntech.com>

1 attachments (230 KB)

Ltr to N. Bangayan Re Protest Decision .pdf;

Hafa Adai Mrs. Bangayan:

The attached letter dated January 25, 2022, was faxed to your office on January 26 and 31. Please acknowledge receipt by return email. Thank you.

--

Si Yu'os ma'åse',

UNIVERSITY OF GUAM

Cynthia T. Guerrero, MPA

Office of the Legal Counsel
Office: +1 (671) 735-2992
cguerrero@triton.uog.edu
https://www.uog.edu/administration/office-of-the-president/legal-counsel

The University of Guam is an equal opportunity provider and employer.

UNIVERSITY OF GUAM
UNIBETSEDÅT GUÅHAN

OFFICE OF THE PRESIDENT

Resending

Resending

FAX TRANSMITTAL

TO: Ms. Nelia Bangayan
All Business Ent.
~~f Guam~~
~~Suite 706~~

DATE: January 26, 2022

FR: Thomas W. Krise, Ph.D.
President

FAX NO. (671) 646-0589 (3 PP.)

RE: Protest Decision UOG IFB B21-17

☑ URGENT ☑ FOR REVIEW ☑ SEE COMMENTS ☐ PLEASE REPLY ☐ PLEASE RECYCLE

COMMENTS:

Transmitted herewith is a copy of a letter dated January 25, 2022, addressed to Ms. Bangayan from Thomas W. Krise.

Thank you.

Faxed 1/26
TWK

T: +1 671.735.2992 F: +1 671.734.2296 W: www.uog.edu
Mailing Address: 303 University Drive UOG Station Mangilao, Guam 96923

TAB 7

UNIVERSITY OF GUAM'S STATEMENT ANSWERING THE ALLEGATIONS OF ALL BUSINESS ENTERPRISES CORP.'S APPEAL

COMES NOW, the Purchasing Agency University of Guam (UOG) who, pursuant to 2 G.A.R., Div. 4, §12105(g), makes its statement answering the allegations of All Business Enterprises Corp.'s (ABE) Appeal and said statement is as follows:

BACKGROUND

On or about October 22, 2021, the University issued UOG-IFB-B21-17 (Purchasing of HVAC Equipment) ("IFB"), the IFB required, in relevant part, that the successful bidder provide condenser coils that are copper finned and **which have been coated on the condenser and evaporator coils with a uniformly applied epoxy electrodeposition, phenolic, or vinyl type coating to all coil surface areas without material bridging between fins** (Bold Emphasis Added). Section 2.2.1.1 Air-To-Refrigerant Coil, IFB Specifications, excerpt of IFB attached herein as Exhibit 1. The IFB also required, in relevant part, that the successful bidder must provide UOG with the Manufacturer's standard catalog data, at least five (5) weeks prior to the purchase or installation of a particular component, highlights to show material, size, options, performance charts and curves, etc., in adequate detail to demonstrate compliance with contract requirements. Section 2.1 Materials, IFB Specifications, Id. On November 19, 2021, UOG issued IFB Amendment 3 which stated in relevant part, that UOG confirm the funding source for the IFB contract would be the Higher Education Emergency Relief Fund ("HEERF") and that the Buy American Act is to be followed "to the most extent possible." See excerpts from IFB Amendment 3, Id.

Three bidders submitted bids in response to the IFB, ABE, JWS, and TONY'S WORKSHOP. UOG conducted a bid opening via Zoom conference at approximately 3:00 p.m. on December 6, 2021 and determined that TONY'S WORKSHOP submitted the lowest bid. See IFB's Abstract Analysis attached herein as Exhibit 2. On or about December 7, 2021, the University issued a Notice of Award of the IFB contract to TONY'S WORKSHOP. See Notice of Award attached herein as Exhibit 3.

On December 6, 2021, ABE submitted a Freedom of Information Act request on UOG requesting a copy of TONY'S WORKSHOP and JWS' bids submitted in response to the IFB including their ACCU Unit Brochures. UOG made those records available for ABE's inspection on December 13, 2021 and ABE received copies of those document on or about that day. On December 17, 2021 ABE filed a protest regarding the award of the IFB and UOG issued its decision denying the protest on January 25, 2022. On or about February 7, 2022 ABE filed the appeal in this matter.

ARGUMENT

As will be shown below, the OPA must deny ABE's appeal in this matter and award UOG its reasonable costs and attorney's fees for responding to ABE's December 17, 2021 Protest and this appeal for the following reasons. First, TONY'S WORKSHOP's bid was responsive. Second, ABE's allegations concerning JWS are moot. Third, ABE's allegations regarding JWS' bid are not properly before the OPA. Fourth, the OPA must not automatically disqualify JWS's bid. Fifth, JWS's Bid did not violate the Buy American Act of 1933. Sixth, JWS's bid did not violate the IFB

Specifications. Finally, ABE has submitted a frivolous protest and appeal and UOG is entitled to its reasonable costs and attorney fees for responding to them.

1. The Bid for TONY'S WORKSHOP was Responsive

There is no merit to ABE's allegation that the bid from TONY'S WORKSHOP was non-responsive. As shown above, Section 2.2.1.1 of the IFB's specifications required that the successful bidder provide condenser coils that are copper finned and coat the condenser and evaporator coils with a uniformly applied epoxy electrodeposition, phenolic, or vinyl type coating to all coil surface areas without material bridging between fins. Hence, so long as the condenser coils on the HVAC equipment provided by the successful bidder are coated with either a epoxy electrodeposition, phenolic, or a vinyl type coating, the units have met this specification. Further, ABE merely assumes that TONY'S WORKSHOP's bid is non-responsive because the description of the coating for six of the units in the brochure that accompanied it's bid did not describe which of the three coatings would be provided. However, as shown above, Section 2.1 of the IFB's specifications state that the successful bidder must provide UOG with the Manufacturer's standard catalog data, at least five (5) weeks prior to the purchase or installation of a particular component, highlights to show material, size, options, performance charts and curves, etc., in adequate detail to demonstrate compliance with contract requirements. Hence, for the six units identified by ABE as not having descriptions of which of the three condenser coil coatings authorized by the specifications the units will have, the specifications require TONY'S WORKSHOP to provide the manufacturers standard catalog data at least five (5) weeks prior to the purchase or installation of a the six (6) units at issue showing

compliance with the condenser coating requirement. Currently, the aforementioned five (5) week time period for Tony's Workshop to provide this information has not begun because UOG has not purchased or installed any of the six (6) units identified in ABE's protest and this appeal. Based on the foregoing, ABE's allegations that TONY'S WORKSHOP's bid submitted in response to the IFB was non-responsive have no merit.

2. ABE's Allegations Concerning JWS' Bid are Moot

Should the OPA find that TONY'S WORKSHOP's bid is responsive, it must find that ABE's remaining allegations concerning the responsiveness of JWS' bid are moot. It is a well-settled general rule that the existence of an actual controversy is an essential requisite to appellate jurisdiction and every judicial tribunal has a duty to decide actual controversies by a judgment which can be carried into effect, and not to give opinions upon moot questions or abstract propositions, or to declare principles or rules of law which cannot affect the matter in issue in the case before it. *People v. Blas,* 2016 Guam 19, ¶12. Further, a case can become moot at any stage of litigation and a claim is moot when the issues are no longer live or the parties lack a legally cognizable interest in the outcome. Id., at ¶13. Here, should the OPA find that TONY'S WORKSHOP's bid is responsive, neither UOG or ABE will have any legal cognizable interest in the outcome of the OPA deciding ABE's allegations regarding the responsiveness of JWS' bid. Hence, the OPA must find these allegations moot if it finds that TONY'S WORKSHOP's bid was responsive to the IFB.

3. ABE's Claims Regarding JWS' Bid are Not Properly before the OPA

ABE's claims regarding JWS' bid are not properly before the OPA and the OPA does not have the jurisdiction to decide them. Generally, the jurisdiction of the OPA is limited to matters properly submitted to it. 5 G.C.A. §5703(a) and *TRC Environmental Corp. v. OPA*, Superior Court of Guam Special Proceedings Case No. SP0160-07, Decision and Order, p. 5 (Nov. 24, 2008). ABE had no authority to protest JWS' bid because UOG did not award the IFB contract to JWS. Generally, any actual or prospective bidder, offeror, or contractor who may be aggrieved in connection with the method of source selection, solicitation or award of a contract, may protest to the head of a purchasing agency. 5 G.C.A. §5425(a). Further, Protestors may file a protest on any phase of solicitation or award including, but not limited to, specifications preparation, bid solicitation, award, or disclosure of information marked confidential in the bid or offer. Section 9.2.3.2, UOG Procurement Regulations. Further, a purchasing agency's procurement protest decision relative to the protest of a method of selection, solicitation, or award of a contract, may be appealed by the protestant to the Public Auditor within fifteen (15) days after receipt of the protestant of the notice of decision. 5 G.C.A. §5425(e). Here, UOG has not awarded a contract to JWS. Hence, neither 5 G.C.A. §5425(a) or Section 9.2.3.2, UOG Procurement Regulations give ABE the right to protest JWS' bid because the bid, by itself, does not constitute a method of source selection, a solicitation or an award of a contract. Although UOG's protest decision states that ABE's allegations concerning JWS' bid are moot and that, alternatively, ABE's allegations concerning

the coating on the coils of the HVAC equipment offered by JWS' bid had no merit, there has been no protest decision concerning an award of the IFB's contract to JWS that could properly be before the OPA. Therefore, without an award of the contract to JWS, ABE's allegations concerning JWS' bid are not properly before the OPA and the OPA lacks the jurisdiction to consider them.

4. The OPA must not Automatically Disqualify JWS' Bid

Alternatively, ABE's allegations concerning JWS' bid do not automatically disqualify said bid. Generally, if after an award it is determined that a solicitation or award of a contract is in violation of law, and if the person awarded the contract has not acted in bad faith, then the contract award may be ratified, if doing so is in the best interests of the government or terminated. 5 G.C.A. §5452(a) and Section 9.7, UOG Procurement Regulations. Here, ABE alleges that the HVAC equipment JWS offers in its bid violates the Buy American Act because it is of foreign manufacture and that this should automatically disqualify them and allow the OPA to award the IFB contract to them should the OPA find that TONY'S WORKSHOP's bid was non-responsive. However, 5 G.C.A. §5452(a) and Section 9.7, UOG Procurement Regulations only authorize the OPA to order UOG to terminate its contract with TONY'S WORKSHOP unless UOG ratifies the contract award.

5. JWS's Bid did not violate the Buy American Act of 1933.

ABE's allegations that JWS' bid was non-responsive because it violated the Buy American Act of 1933 have no merit. The Buy American Act of 1933, as codified in 41 U.S.C. §§ 8301–8305, generally encourages government agencies, to which the act applies, to acquire

supplies for use in the United States under a contract to purchase domestic end products, in relevant part, instead of foreign products. Under the Buy American Act, manufactured end products, such as the HVAC equipment at issue in this matter, qualify as domestic if they are manufactured in the U.S., and either: (1) The cost of the components mined, produced, or manufactured in the United States exceeds 55% of the cost of all components; or (2) The end product is a commercially available off-the-shelf ("COTS") item. 48 C.F.R. §25.003. Here, the HVAC Equipment being offered by JWS is made by Dunham-Bush which was founded in the U.S. in 1894 and is one of the oldest global commercial heating and air conditioning unit manufacturers and they have a factory in Miami, Florida. Therefore, JWS' bid did not violate the Buy American Act of 1933.

6. JWS's Bid did not violate the IFB Specifications.

UOG hereby incorporates its arguments regarding TONY'S WORKSHOP's compliance with the IFB specifications set forth in Paragraph 1 herein as if fully set forth, and applies said arguments to JWS's bid.

7. The OPA must Award UOG its Reasonable Costs and Reasonable Attorney Fees

The OPA must find that ABE's December 17, 2021 protest and this appeal were made fraudulently, frivolously, or solely to disrupt the procurement process and award UOG its reasonable costs and reasonable attorney fees in responding to the email and this appeal. Generally, the Public Auditor shall have the power to assess reasonable costs including reasonable attorney fees incurred by the government, including its autonomous agencies and

public corporations, against a protestant upon its finding that the protest was made fraudulently, frivolously or solely to disrupt the procurement process. As shown above, there is no merit to the allegations in ABE's December 17, 2021 protest, and ABE did not have the authority to file a protest concerning JWS' bid, which makes its allegations and this appeal frivolous. Therefore, the OPA must find that ABE's protest and this appeal are at least frivolous, and possibly fraudulent, and meant solely to disrupt the procurement process and award UOG its reasonable costs and reasonable attorney fees in responding to the protest and this appeal.

CONCLUSION

Based on the foregoing, the OPA must deny ABE's appeal, sustain UOG's January 25, 2022 protest decision, and the OPA must find that ABE's protest and this appeal are at least frivolous, and possibly fraudulent, and meant solely to disrupt the procurement process and award UOG its reasonable costs and reasonable attorney fees in responding to them.

SUBMITTED this 22nd day of February 2022 by:

ANTHONY R. CAMACHO, ESQ.
UOG General Counsel

1.2 SUBMITTALS

SD-03 Product Data Spare Parts

Posted Instructions

Coil Corrosion Protection System Performance Tests Training

Inventory

Environmental Data

Supplied Products

SD-06 Test Reports

Refrigerant Tests, Charging, and Start-Up

System Performance Tests

SD-07 Certificates Service

Organizations

SD-10 Operation and Maintenance Data

Operation and Maintenance Manuals

1.3 DELIVERY, STORAGE, AND HANDLING

Protect stored items from the weather, humidity and temperature variations, dirt and dust, or other contaminants. Properly protect and care for all material both before and during installation. Submit an inventory of all the stored items. Replace any materials found to be damaged, at no additional cost to the Government. During installation, cap piping and similar openings capped to keep out dirt and other foreign matter.

1.4 ENVIRONMENTAL REQUIREMENTS

For proper Indoor Environmental Quality, maintain pressure within the building as indicated. Ventilation mustmeet or exceed ASHRAE 62.1 and all published addenda. Meet or exceed filter media efficiency as tested in accordance with ASHRAE 52.2. Thermal comfort must meet or exceed ASHRAE 55.

1.5 WARRANTY

Provide equipment with the 1 year manufacturer's warranty

PART 2 PRODUCTS

2.1 MATERIALS

Provide Manufacturer's standard catalog data, at least 5 weeks prior to the purchase or installation of a particular component, highlighted to show material, size, options, performance charts and curves, etc. in adequate detail to demonstrate compliance with contract requirements. Data includes manufacturer's recommended installation instructions and procedures. If vibration isolation is specified for a unit, include vibration isolator literature

Exhibit 1

2.1.4 Safety Devices

Exposed moving parts, parts that produce high operating temperature, parts which may be electrically energized, and parts that may be a hazard to operating personnel must be insulated, fully enclosed, guarded, or fitted with other types of safety devices. Safety devices must be installed so that proper operation of equipment is not impaired. Welding and cutting safety requirements must be in accordance with AWS Z49.1.

2.2 EQUIPMENT

2.2.1 Large-Capacity Split-System Air Conditioners (Greater Than 65,000 Btu/h)

Provide an air-cooled, split system which employs a remote condensing unit, a separate indoor unit, and interconnecting refrigerant piping. Provide the air conditioning type unit conforming to applicable Underwriters Laboratories (UL) standards including UL 1995. Unit must be rated in accordance with ANSI/AHRI 210/240. Provide unit with necessary fans, air filters, and cabinet construction as specified in paragraph UNITARY EQUIPMENT ACCESSORIES. Provide double-width, double inlet, forward curved centrifugal scroll type evaporator or supply fans. Provide the manufacturer's standard for the unit specified and may be centrifugal scroll type condenser or outdoorfans. Enclose fan condenser motors in totally enclosed enclosures and permanently lubricate ball bearings. Air Conditioners must have a minimum energy efficiency ratio (EER) of 12.

2.2.1.1 Air-To-Refrigerant Coil

Provide coils with copper tubes of 3/8 inch minimum diameter with copper fins that are mechanically bonded or soldered to the tubes. Provide casing of galvanized steel. Avoid contact of dissimilar metals. Test coils in accordance with ASHRAE 15 & 34 at the factory and ensure suitability for the working pressure of the installed system. Dehydrate and seal each coil testing and prior to evaluation and charging. Provide each unit with a factory operating charge of refrigerant and oil. Field charge unit shipped with a holding charge with refrigerant and oil. Provide separate expansion devices for each compressor circuit. Condenser coil must have special coating for corrosion resistance. Condenser coil must be copper finned. Coat condenser and evaporator coil with a uniformly applied epoxy electrodeposition, phenolic, or vinyl type coating to all coil surface areas without material bridging between fins. Apply coating at either the coil or coating manufacturer's factory. Coating process must ensure complete coil encapsulation and be capable of withstanding a minimum 1,000 hours exposure to the salt spray test specified in ASTM B117 using a 5 percent sodium chloride solution.

2.2.1.2 Refrigeration Circuit

Refrigerant-containing components must comply with ASHRAE 15 & 34 and be factory tested, cleaned, dehydrated, charged, and sealed. Provide refrigerant charging valves and connections, and pumpdown valves foreach circuit.

2.2.1.3 Unit Controls

Provide unit internally prewired with a 208 volt control circuit powered by an internal transformer. Provide terminal blocks for power wiring and external control wiring. Unit must have cutoffs high and low pressure, andlow oil pressure for compressors with positive displacement oil pumps, supply fan failure, and safety interlocks on all service panels. Stage multiple compressors by means of a time delay. Internally protect unit by a circuit breaker in accordance with UL 1995.

UNIVERSITY OF GUAM
UNIBETSEDÅT GUÅHAN

ADMINISTRATION & FINANCE
Consolidated Procurement Office

AMENDMENT 3

Invitation for Bid (IFB)
UOG IFB No. B21-17

Date Issued: November 19, 2021

"PURCHASING HVAC EQUIPMENT"

This is to notify all prospective offerors of the following amendment set forth below:

1.1 **Question & Answer Sheet 1 as set forth in the attached.**
1.2 **REPLACE Exhibit B** "Scope of Work & Bid Price Form" with corrected forms as set forth in the attached.
1.3 **Copy of Pre-bid Conference Sign-In sheet as set forth in the attached.**
1.4 **Deadline for submission should read as follows: Monday, November 29, 2021 at 2:00 p.m. (your bid submission must be submitted electronically to the Bid Share folder provided by UOG Procurement Office on or before 2:00 p.m.) Bid opening will take place at 3:15 p.m. via ZOOM link provided by procurement office to all registered offerors.**

All other terms and conditions remain the same.

Emily G. Gumataotao
Supply Management Administrator

Please acknowledge receipt and email: **uog.bids@triton.uog.edu:**

Name of company: _____

_____
Print Name/Signature/date

T: +1 671.735.2925 F: +1 671.735-3010 W: www.uog.edu E: uog.bids@triton.uog.edu
Mailing Address: 303 University Drive UOG Station Mangilao, Guam 96913

UOG INVITATION FOR BIDS NO. B21-17:
PURCHASING OF HVAC EQUIPMENT

QUESTION & ANSWER SHEET NO. 1
November 19, 2021

In response to the written "Questions" and/or 'Request for Clarifications' UOG received as of 10/26/2021 @ 4:49pm from vendor: **Guam Pacific Enterprise, Inc.**

Question 1: Section 5011 of Chapter 5 is not included in the Bid documents. (Policy In Favor of Serviced - Disabled Veteran Owned Business)

Answer: **Please refer to Amendment 2. Item 1.4 #21**

Question 2: Is the Bid All or None Bid?

Answer: **UOG confirms yes, this is an All or None Bid.**

Question 3: Is the installation required?

Answer: **UOG confirms Installation is not required.**

Question 4: Also, will you be using Federal Financial assistance Awards for this Bid therefore it is covered by Buy American Act.

Answer: **UOG confirms Funds are from Higher Education Emergency Relief Fund (HEERF) The Buy American Act is to be followed "to the most extent possible.**

In response to the written "Questions" and/or 'Request for Clarifications' UOG received as of 10/29/2021 @ 5:48pm from vendor: **MJM International Corporation**

Question 1: May I please get more information for the attached? Kindly clarify if it is the ton per unit and column (ton) is the total tonnage.

Answer: **UOG confirms ton is the total tonnage.**

In response to the written "Questions" and/or 'Request for Clarifications' UOG received as of 11/7/2021 @ 12:00pm from vendor: **JWS Refrigeration & A/C Ltd.**

Question 1: It was mentioned that you want to use only one manufacturer for the complete project, but you have Daikin condensers at the Marine Lab. It also is our understanding that many of the indoor units connected to these Daikin condensers also do not operate. These are VRF systems, which means they communicate with each other so you cannot use different manufacturers. Please clarify your intensions on this system.

Answer: **UOG Confirms there is no need for VRF/VRV units as Item Description/Location has been revised to remove Marine Lab requirement. Please refer to Amendment 3, item 1.2.**

Answer: **UOG confirms Funds are from Higher Education Emergency Relief Fund (HEERF) The Buy American Act is to be followed "to the most extent possible.**

Question 2: The RFQ Equipment specifications refer to VFR /VRV Units. It does not go into detail on the units being requested.

Answer: **UOG Confirms there is no need for VRF/VRV units as Item Description/Location has been revised to remove Marine Lab requirement. Please refer to Amendment 3, item 1.2.**

Question 3: Of the units requested, the RFQ does not state whether they are Packaged Units, or Ducted Split Units that require Air Handling Units.

Answer: **UOG confirms we are purchasing "Ducted Split Condensers only. No AHU's in this bid.**

Question 4: The RFQ does not state efficiency requirements (EER rating)
Answer: **UOG confirms there are no EER rating.**

Question 5: Are you asking for direct replacements for the units in each of the buildings?

Answer: **UOG confirms, no. In some of the buildings we are consolidating units from smaller units to a bigger unit.**

Question 6: The RFQ mentions Storage, some about installation, & providing specs 5 weeks in advance of purchases. However, the Scope states it purchase only.

Answer: **UOG confirms no storage or installation required.**

Question 7: Does the bidder need to supply storage?

Answer: **UOG confirms no storage required**

In response to the written "Questions" and/or 'Request for Clarifications' UOG received as of 11/9/2021 @ 3:14pm from vendor: **Ability Solutions LLC**

Question 1: Can you provide a copy of the transcript for the sign-in on inspection day?

Answer: **Please refer to Amendment 3, item 1.3.**

In response to the written "Questions" and/or 'Request for Clarifications' UOG received as of 11/10/2021 @ 10:02am from vendor: **Ability Solutions LLC**

Question 1: May I inquire when the deadline is to deliver the equipment's?

UNIVERSITY OF GUAM
UNIBETSEDÅT GUÅHAN

ADMINISTRATION & FINANCE
Consolidated Procurement Office

ABSTRACT ANALYSIS
UOG IFB BID NO. B21-17
Title: PURCHASING OF HVAC EQUIPMENT
Date Issued: 10/22/2021 Date/Time Opened: 12/06/2021/ 3:15 p.m.
Amendments Issued: Amendment 1 10/29/2021, **Amendment 2** 10/29/2021, **Amendment 3** 11/19/2021, **Amendment 4** 11/22/2021, **Amendment 5** 11/24/2021, & **Amendment 6** 12/03/2021
This Bid is requested for: Lowest Responsive and Responsible Bidder

	VENDORS/BIDDERS		
	ALL BUSINESS ENTERPRISE	JWS	TONY'S WORKSHOP
Date Bid Submitted	12/06/2021	12/06/2021	12/06/2021
Time Bid Submitted	11:31	11:33	1:21 PM
Business License	X	NOT INCLUDED	NOT INCLUDED
Contact for Contract Administration (B)	X	X	X
Bidder's Qualifications (C)	X	X	X
BID SECURITY (D)	CC – $218,410.00	CC – $98,785.80	BB
Major Shareholder Affidavit (E)	X	X	X
Non-Collusion Affidavit (F)	X	X	X
Gratuities, Kickbacks Favors (G)	X	X	X
Ethical Standards (H)	X	X	X
DOL Wage Determination (I)	X	X	X
Contingent Fees (J)	X	X	X
Amendment 1	X	X	X
Amendment 2	X	X	X
Amendment 3	X	X	X
Amendment 4	X	X	X
Amendment 5	X	X	X
Amendment 6	X	X	X

Table 1.0

RFK BUILDING SECOND FLOOR	$120,002.50	$74,837.72	$55,372.32
RFK BUILDING FIRST FLOOR	$107,574.60	$59,870.18	$52,856.01
RFK BUILDING FIRST FLOOR MAIN ENTRANCE	$67,372.50	$22,451.32	$17,711.51
RFK BUILDING FIRST FLOOR AV ROOM	$67,372.50	$22,451.32	$17,711.51
RFK BUILDING FIRST FLOOR OFFICES	$80,461.60	$29,935.09	$24,262.45
PIP SECOND FLOOR	$80,461.60	$29,935.09	$24,262.45
SCIENCE BUILDING FIRST FLOOR	$107,574.60	$59,870.18	$52,856.01
SCIENCE BUILDING SECOND FLOOR	$107,574.60	$59,870.18	$52,856.01
SCIENCE BUILDING THIRD FLOOR	$80,461.60	$29,935.09	$24,262.45
ENGLISH COMMUNICATION BUILDING CLASSROOM	$983,59.60	$44,902.64	$36,503.19
COMPUTER CENTER OIT BUILIDING FIRST FLOR	$120,002.50	$74,837.73	$55,372.32
LECTURE HALL AUDITORIUM	$80,461.60	$29,935.09	$24,262.45
HSS BUILDING	$240,005.00	$74,837.73	$110,134.64
HSS BUILDING	$98,359.60	$44,902.64	$36,503.19
GRAND TOTAL	**$1,456,044.40**	**$658,572.00**	**$584,926.51**

T: +1 671.735.2925 F: +1 671.735.3010 W: www.uog.edu E: uog.bids@triton.uog.edu
Mailing Address: 303 University Drive UOG Station Mangilao, Guam 96913

Exhibit 2

DELIVERY	18-20 WEEKS	9-12 WEEKS	24 WEEKS

TABLE 2.0

Service for Maintenance and upkeep	$51,000.00	$1,275.00 QUARTER $5,100.00 ANNUAL	$26,000.00 QUARTER
Services for disposal	$11,250.00	INCLUSIVE	$54,148.63
Replacement/trade in program	TO BE DISCUSSED UPON AWARD.	1 YEAR WARRANTY	$196,766.42

Attendees: (Print name & sign opposite the firm you represent)

Company/Firm Name	Representative (Print Name)	Signature
All Business Enterprises Corporation	Nelia Bangayan	ONLINE ZOOM
Tony's Workshop	Michael Ecalnea	ONLINE ZOOM
All Business Enterprises Corporation	Gene Bangayan	ONLINE ZOOM
JWS	Anthony Scragg	ONLINE ZOOM

Tabulators:

Emily G. Gumataotao	SMA	ONLINE ZOOM
Kaimana K. Terlaje	Property Control Officer	ONLINE ZOOM

UNIVERSITY OF GUAM
UNIBETSEDÅT GUÅHAN

ADMINISTRATION & FINANCE
Consolidated Procurement Office

December 7, 2021

TONY's WORKSHOP
P.O. Box 23066 GMF
Barrigada, Guam 96921
Main: 671-637-3060
Email: mike@tonysworkshop.com / tonyworkshop@teleguam.net

RE: **NOTICE OF AWARD- UOG IFB B21-17: "PURCHASING OF HVAC EQUIPMENT"**

Dear Sir/Madam:

This letter is to certify that **TONY's WORKSHOP** is being awarded the University of Guam IFB **BID B21-17.**

As a result of our evaluation on the above referenced IFB, a purchase order or contract will be forthcoming.

A representative from the respective unit will be in contact with you upon issuance of the purchase order and/or contract.

If you have any questions, please feel free to contact me at 735-2925 or email at uog.bids@triton.uog.edu.

Thank you and Congratulations!

Sincerely,

Emily G. Gumataotao
Supply Management Administrator

Please acknowledge receipt and return via email to uog.bids@triton.uog.edu.

_____
(Please print name and sign) (DATE)

cc: FMS
PROCUREMENT FILES

T: +1 671.735.2925 F: +1 671.735.3010 W: www.uog.edu E: uog.bids@triton.uog.edu
Mailing Address: 303 University Drive UOG Station Mangilao, Guam 96913

Exhibit 3

UNIVERSITY OF GUAM
UNIBETSEDÅT GUÅHAN

ADMINISTRATION & FINANCE
Consolidated Procurement Office

December 7, 2021

TONY's WORKSHOP
P.O. Box 23066 GMF
Barrigada, Guam 96921
Main: 671-637-3060
Email: mike@tonysworkshop.com / tonyworkshop@teleguam.net

RE: **NOTICE OF AWARD- UOG IFB B21-17: "PURCHASING OF HVAC EQUIPMENT"**

Dear Sir/Madam:

This letter is to certify that **TONY's WORKSHOP** is being awarded the University of Guam IFB **BID B21-17.**

As a result of our evaluation on the above referenced IFB, a purchase order or contract will be forthcoming.

A representative from the respective unit will be in contact with you upon issuance of the purchase order and/or contract.

If you have any questions, please feel free to contact me at 735-2925 or email at uog.bids@triton.uog.edu.

Thank you and Congratulations!

Sincerely,

Emily G. Gumataotao
Supply Management Administrator

Please acknowledge receipt and return via email to uog.bids@triton.uog.edu.

Michael Ecalnea 12/7/21
(Please print name and sign) (DATE)

cc: FMS
PROCUREMENT FILES

TAB 8

UNIVERSITY OF GUAM'S DECLARATION RE COURT ACTION

DECLARATION RE COURT ACTION

Pursuant to 5 GCA Chapter 5, unless the court requests, expects, or otherwise expresses interest in a decision by the Public Auditor, the Office of Public Accountability will not take action on any appeal where action concerning the protest or appeal has commenced in any court.

The undersigned party does hereby confirm that to the best of its knowledge, no case or action concerning the subject of this Appeal has been commenced in court. All parties are required to, and the undersigned party agrees to notify the Office of the Public Accountability within 24 hours if court action commences regarding this Appeal or the underlying procurement action.

SUBMITTED this 22nd day of February, 2022 by:

Anthony R. Camacho

ANTHONY R. CAMACHO, ESQ.
UOG GENERAL COUNSEL